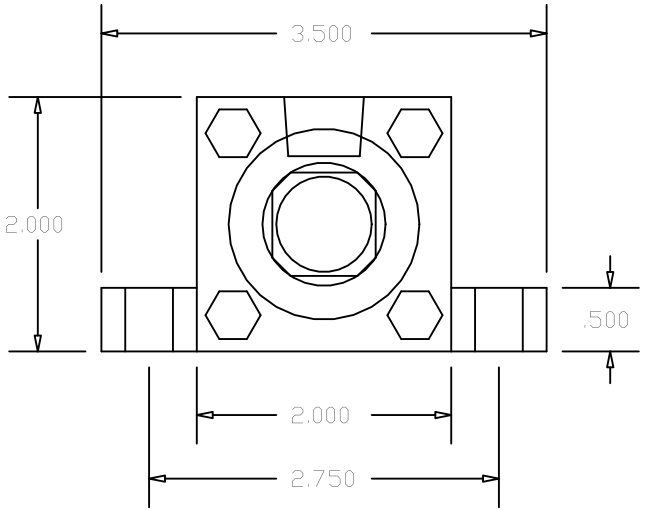

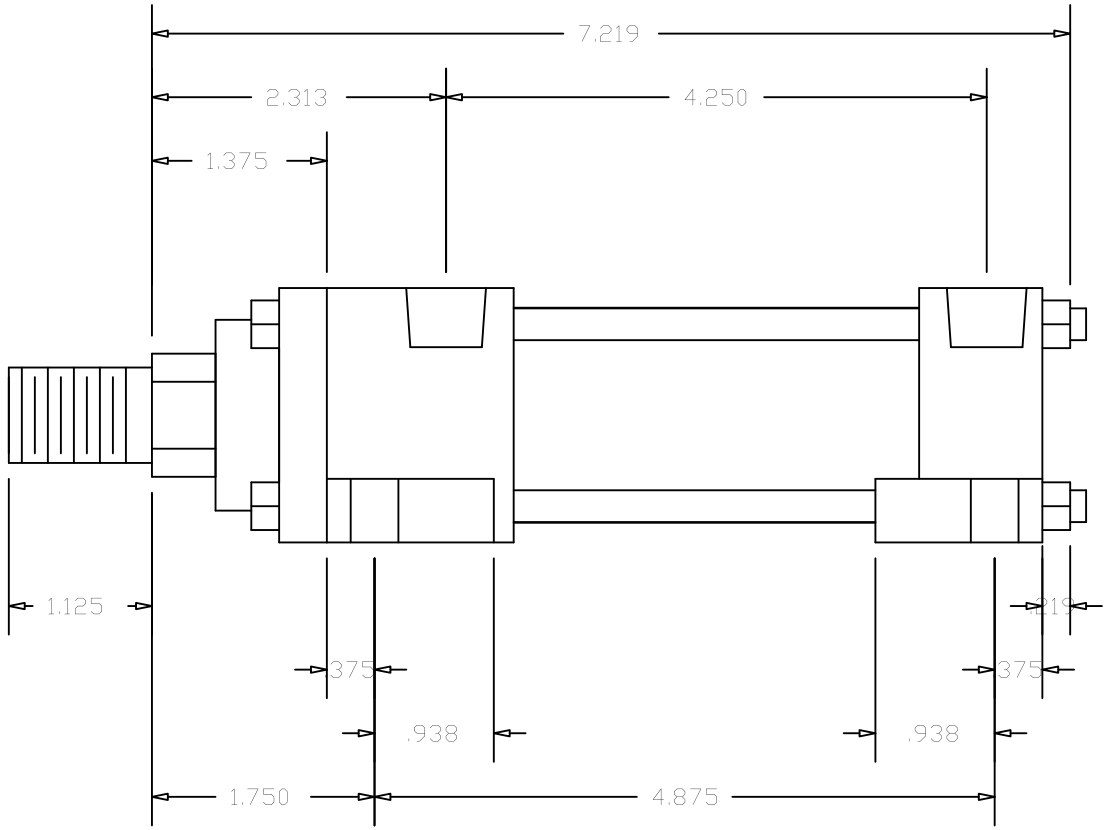

Cylinders Now
Model No: CN15ASL2CCK1
Logia No: CN15ASL2CCK1
Rod End Thread: Male 3/4 - 16 x 1-1/8
Bore: 1.5"
Shaft Dia: 1"
NPT Port Size: 3/8
Mount: SL
Stroke: 2
Series: A
Mount Bolt Size: 1/4