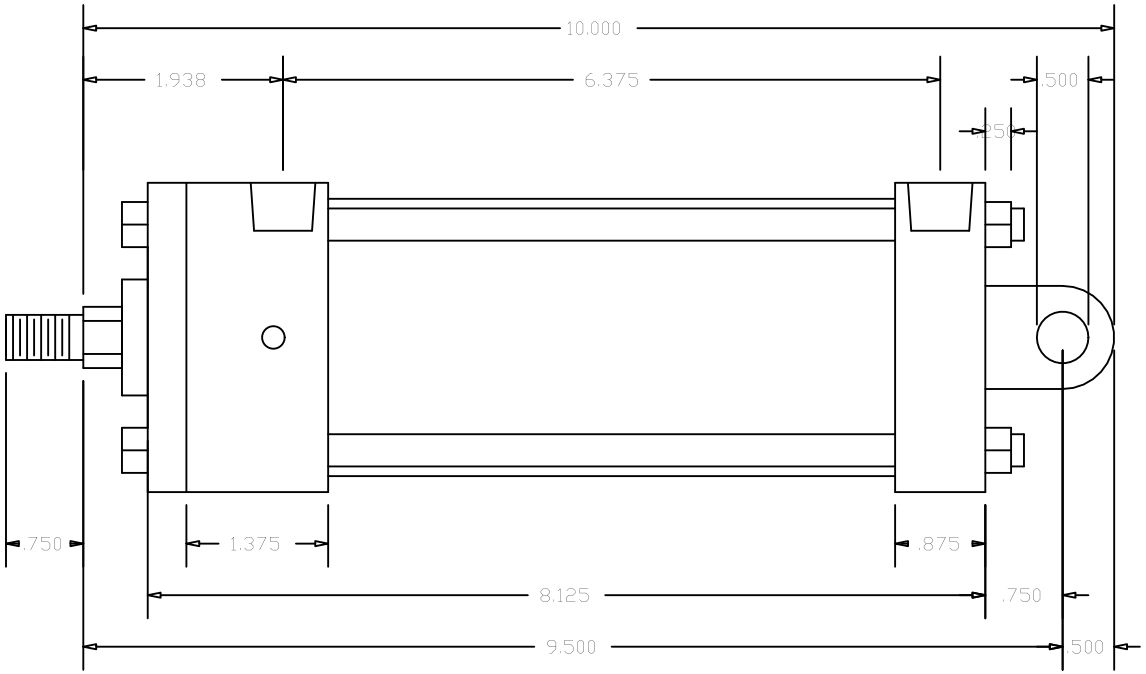

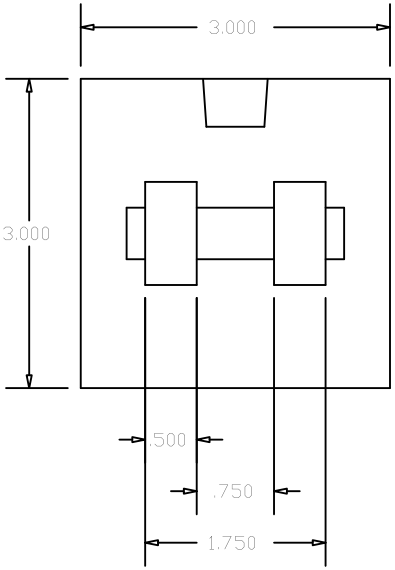

Cylinders Now
Model No: CN25AC4CC
Logia No: CN25AC4CC
Rod End Thread: Male 7/16 - 20 x 3/4
Bore: 2.5"
Shaft Dia: 5/8"
NPT Port Size: 3/8
Mount: C
Stroke: 4
Series: A