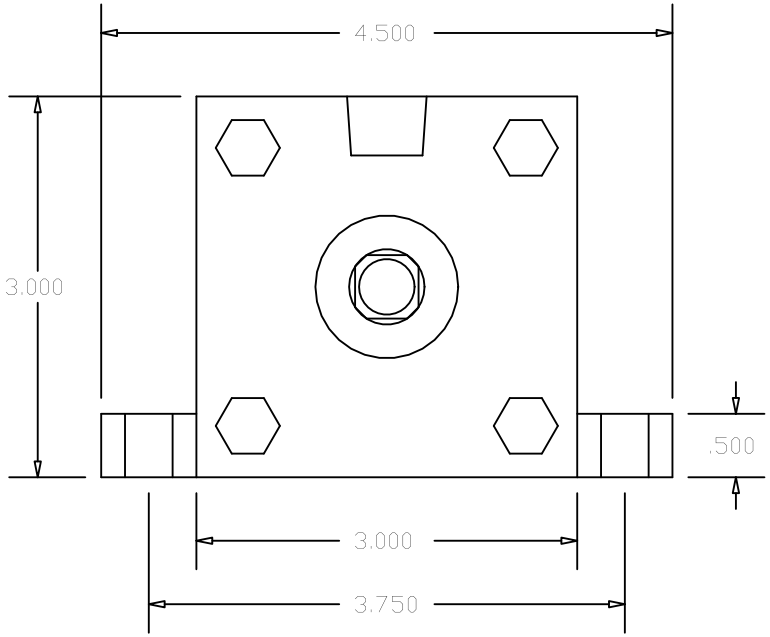

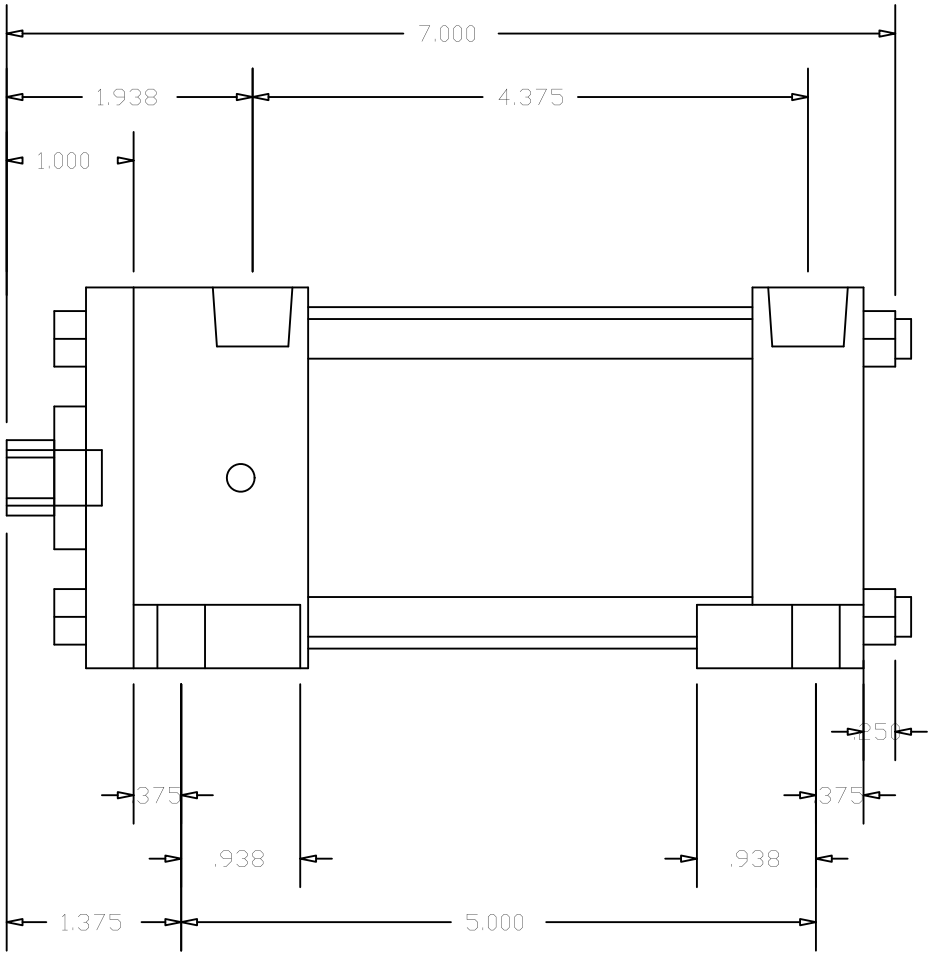

Cylinders Now
Model No: CN25ASL2CCKS4
Logia No: CN25ASL2CCKS4
Rod End Thread: Female 7/16 - 20 x 3/4
Bore: 2.5"
Shaft Dia: 5/8"
NPT Port Size: 3/8
Mount: SL
Stroke: 2
Series: A
Mount Bolt Size: 5/16