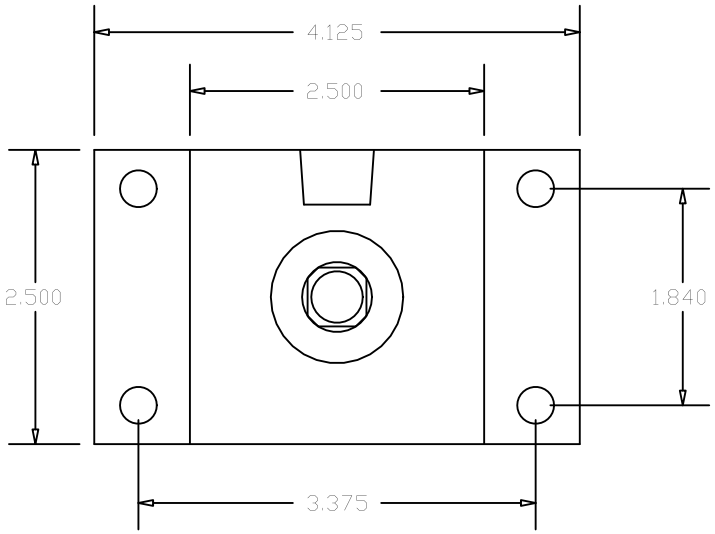

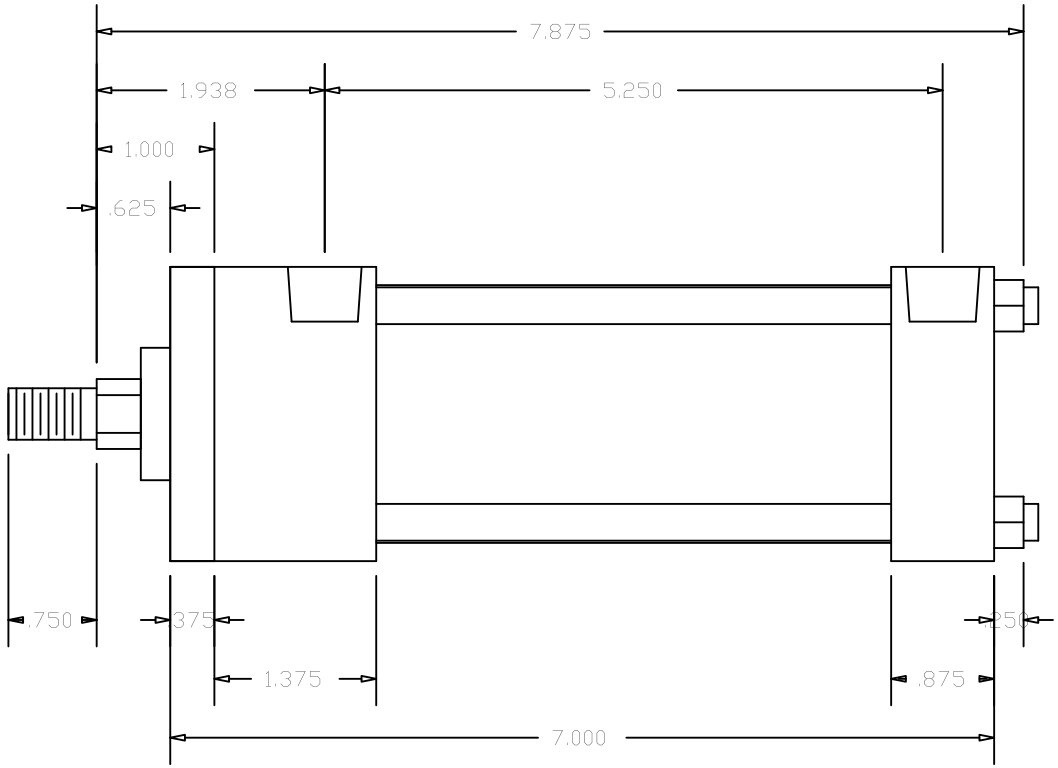

Cylinders Now
Model No: CN2AFF3NC
Logia No: CN2AFF3NC
Rod End Thread: Male 7/16 - 20 x 3/4
Bore: 2"
Shaft Dia: 5/8"
NPT Port Size: 3/8
Mount: FF
Stroke: 3
Series: A
Mount Bolt Size: 5/16