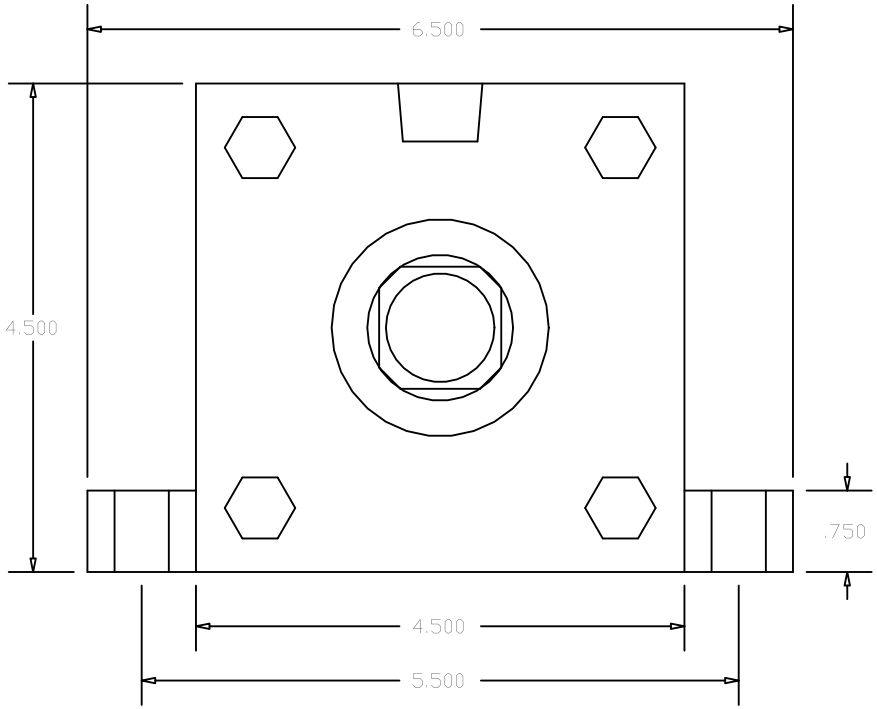

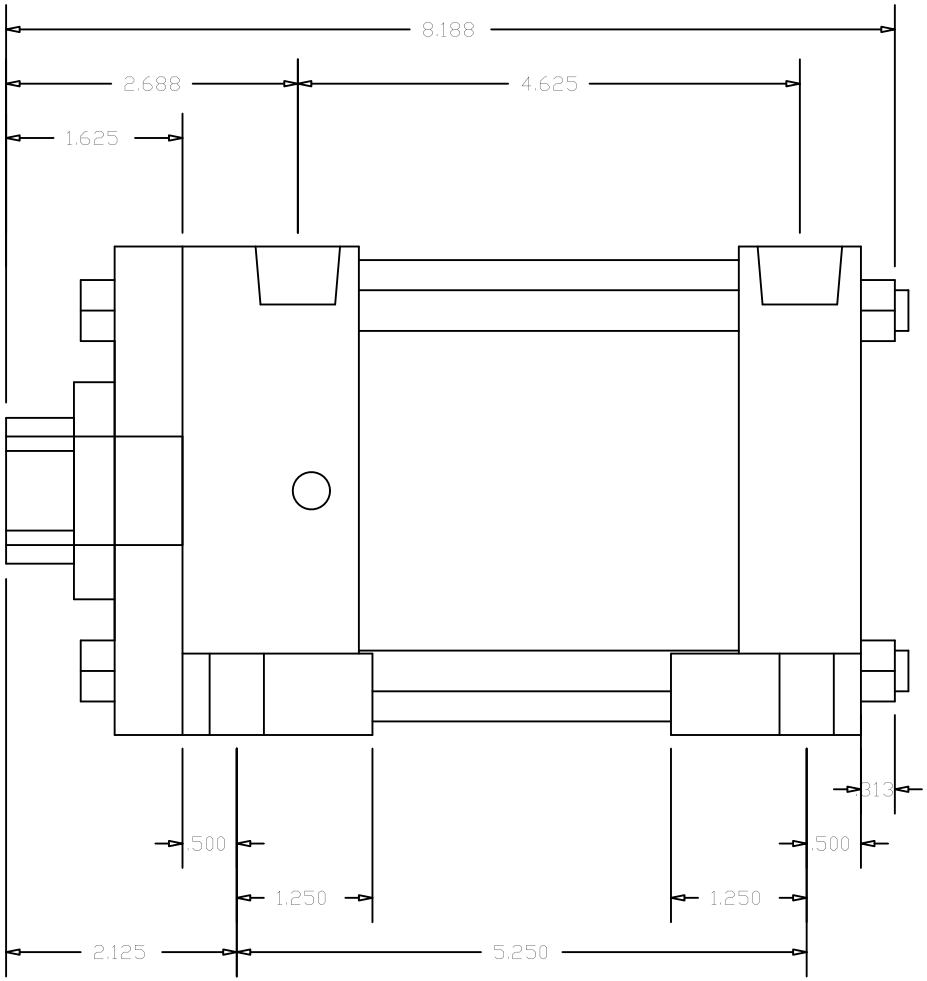

Cylinders Now
Model No: CN4ASL2CCK1375S4
Logia No: CN4ASL2CCK1375S4
Rod End Thread: Female 1 - 14 x 1-5/8
Bore: 4"
Shaft Dia: 1 3/8"
NPT Port Size: 1/2
Mount: SL
Stroke: 2
Series: A
Mount Bolt Size: 3/8