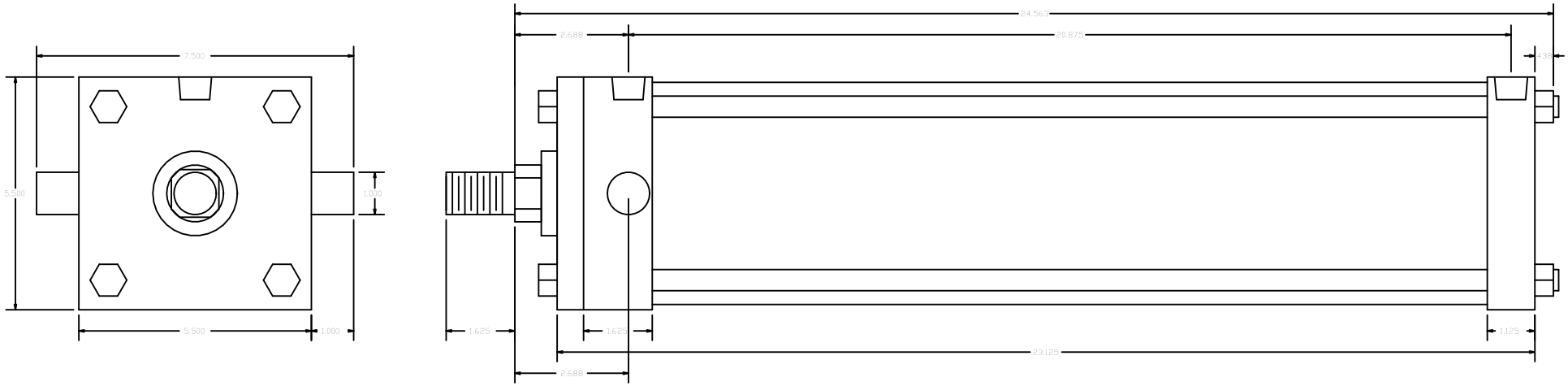

Cylinders Now
Model No: CN5ATF18NCK1375
Logic No: CN5ATF18NCK1375
Rod End Thread: Male 1 - 14 x 1-5/8
Bore: 5"
Shaft Dia: 1 3/8"
NPT Port Size: 1/2
Mount: TF
Stroke: 18
Series: A