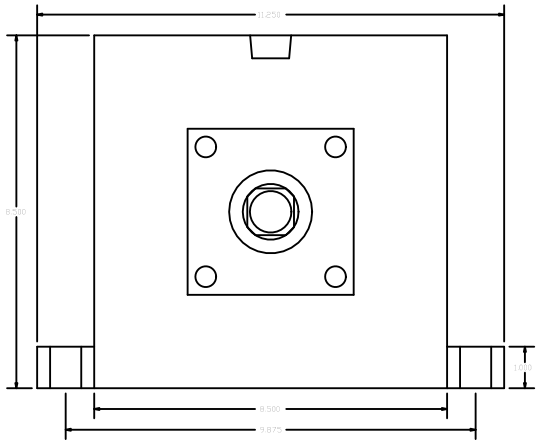

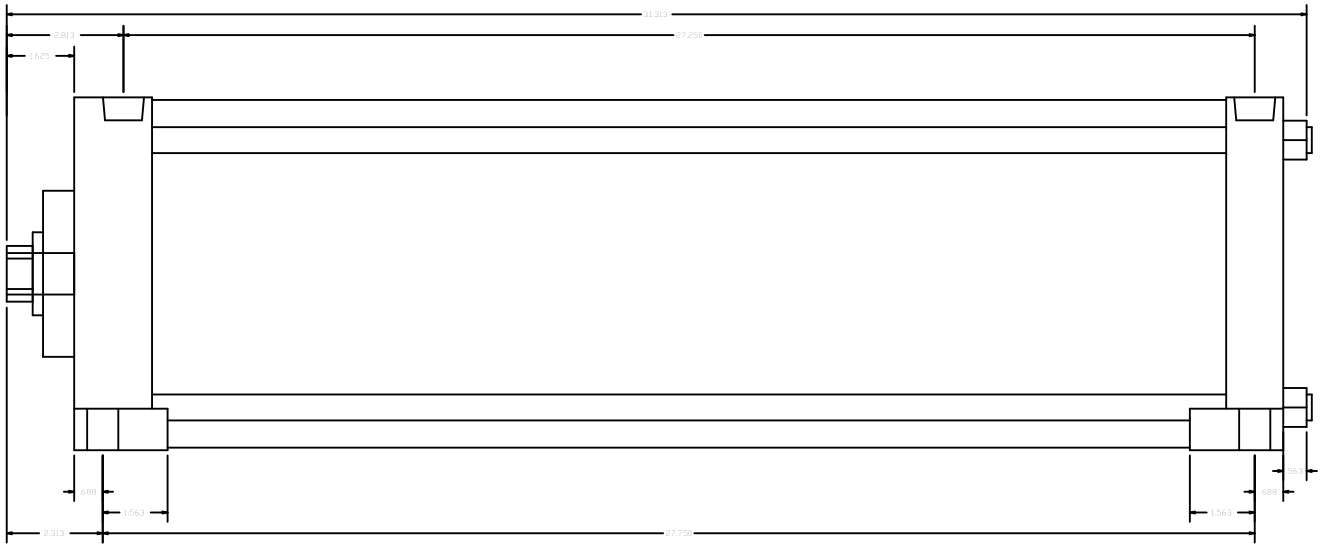

Cylinders Now
Model No: CNBASL24NCKS4
Logo No: CNBASL24NCKS4
Rod End Thread: Female 1 - 14 x 1-5/8
Bore: 8"
Shaft Dia: 1 3/8"
NPT Port Size: 3/4
Mount: SL
Stroke: 24
Series: A
Mount Bolt Size: 5/8