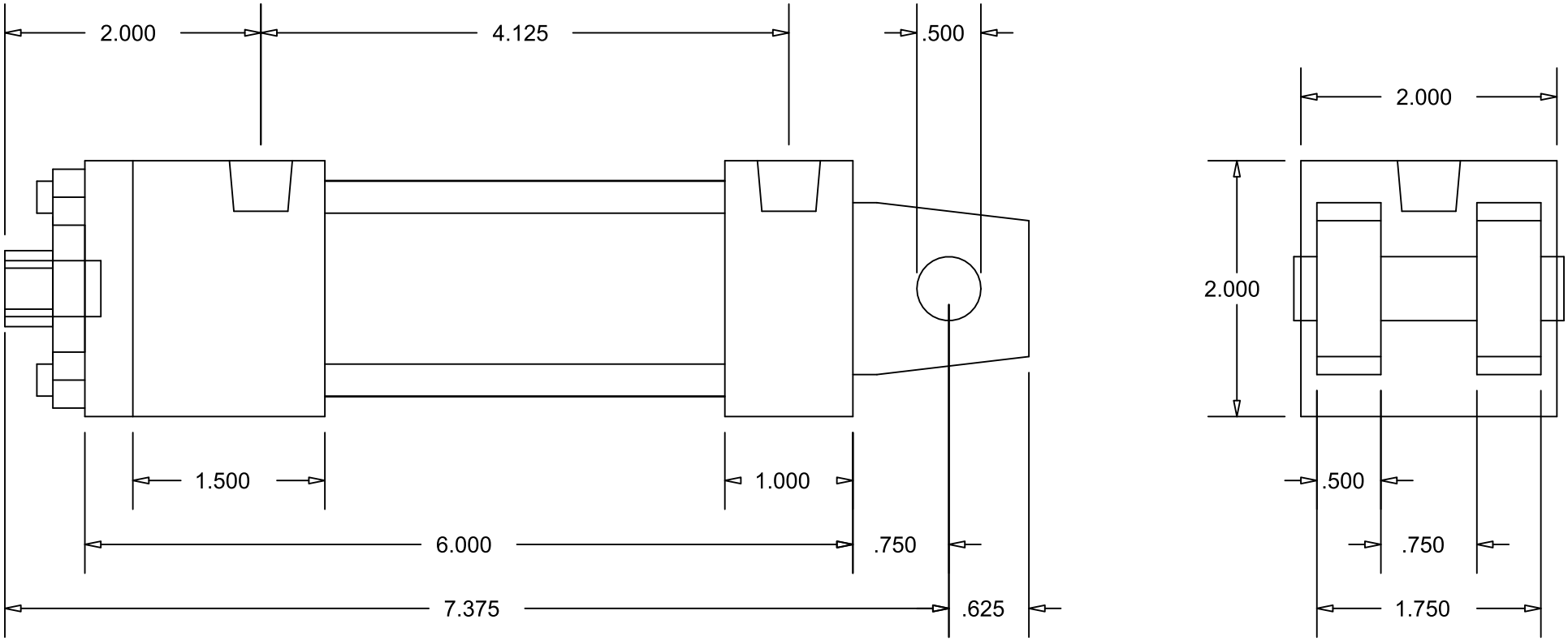

CylindersNow.com
Model No: CN15MAC2NCKS4
Logia No: CN15MAC2NCKS4
Rod End Thread: Female 7/16 - 20 x 3/4
Bore: 1.5
Shaft Dia: 5/8
NPT Port Size: 1/4
Mount: C
Stroke: 2
Series: MA