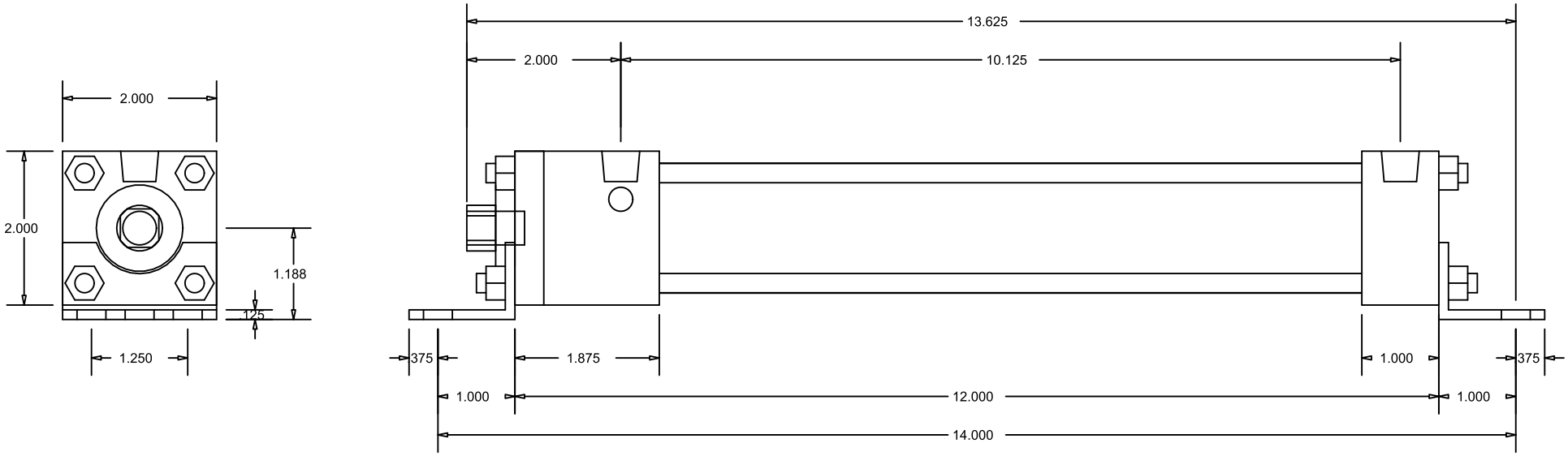

CylindersNow.com
Model No: CN15MAFB8CCKS4
Logia No: CN15MAFB8CCKS4
Rod End Thread: Female 7/16 - 20 x 3/4
Bore: 1.5
Shaft Dia: 5/8
NPT Port Size: 1/4
Mount: FB
Stroke: 8
Series: MA
Mount Bolt Size: 7/16