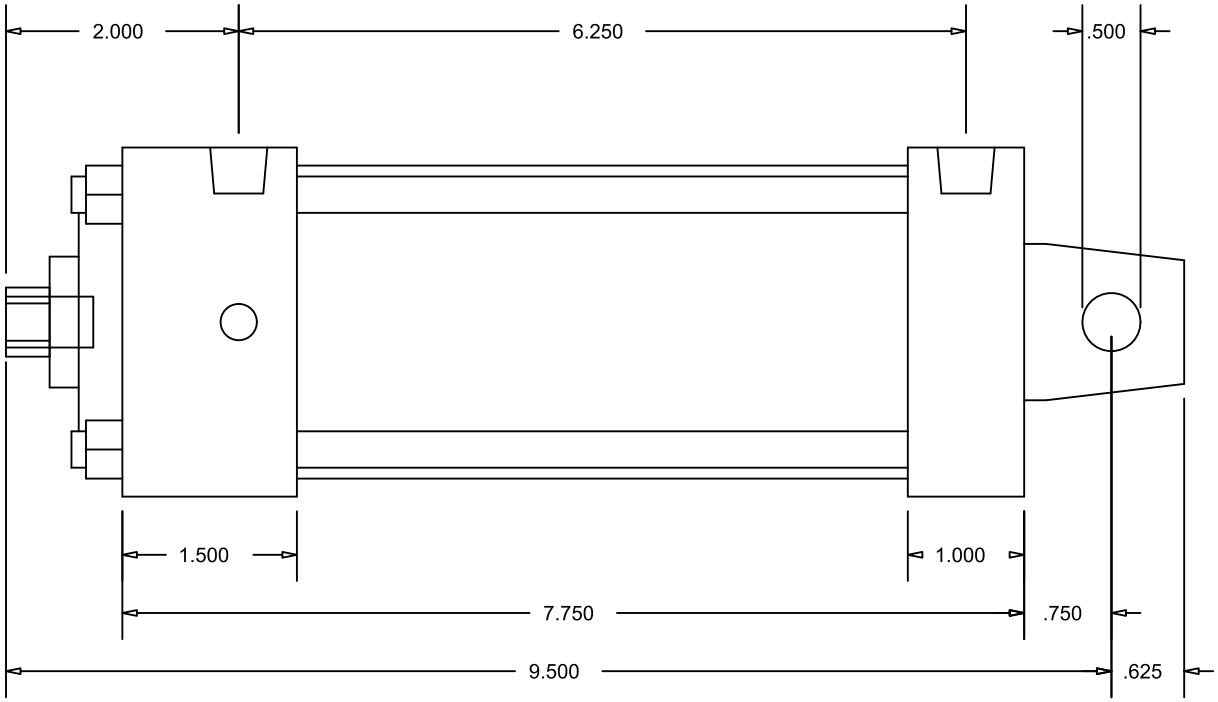

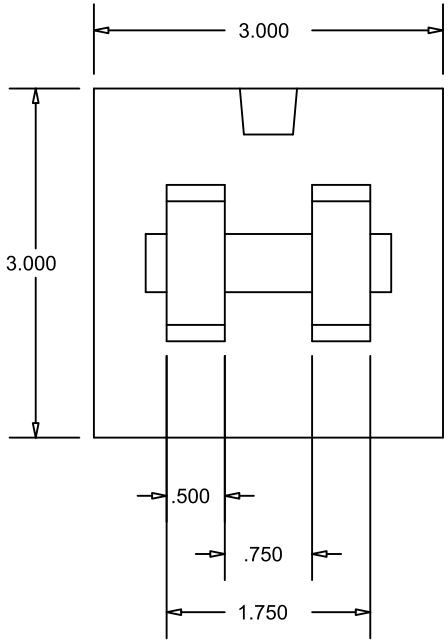

CylindersNow.com
Model No: CN25MAC4CCKS4
Logia No: CN25MAC4CCKS4
Rod End Thread: Female 7/16 - 20 x 3/4
Bore: 2.5
Shaft Dia: 5/8
NPT Port Size: 1/4
Mount: C
Stroke: 4
Series: MA