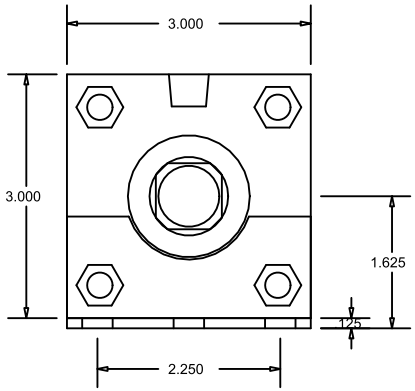

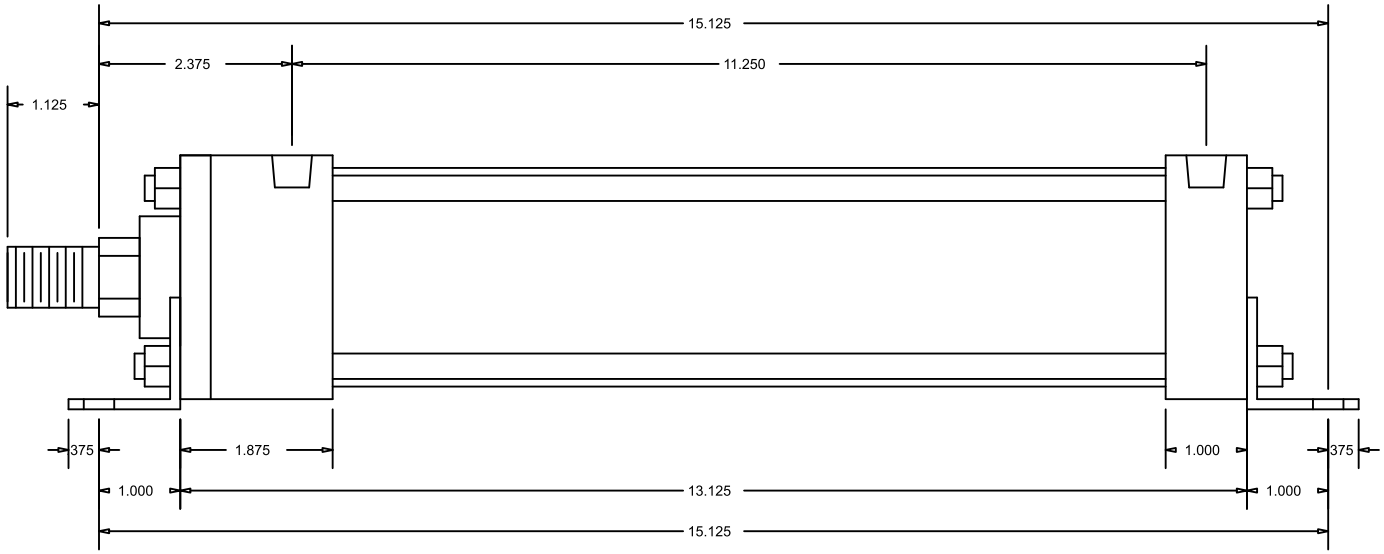

CylindersNow.com
Model No: CN25MAFB9NCK1
Logia No: CN25MAFB9NCK1
Rod End Thread: Male 3/4 - 16 x 1-1/8
Bore: 2.5
Shaft Dia: 1
NPT Port Size: 1/4
Mount: FB
Stroke: 9
Series: MA
Mount Bolt Size: 7/16