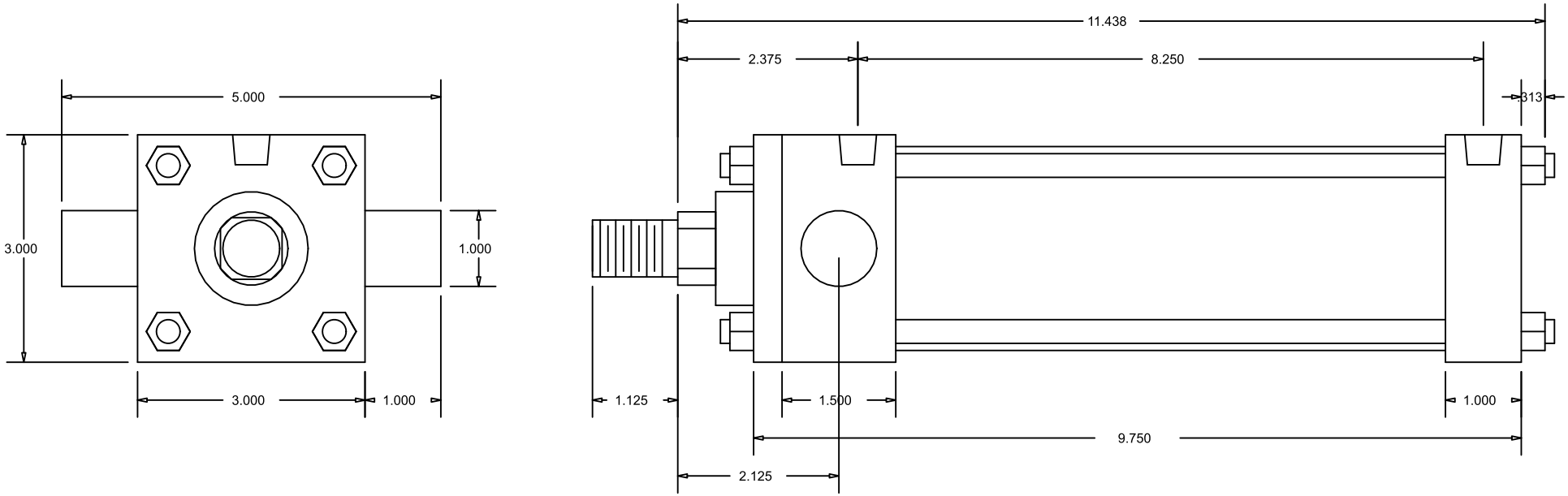

CylindersNow.com
Model No: CN25MATF6NCK1
Logia No: CN25MATF6NCK1
Rod End Thread: Male 3/4 - 16 x 1-1/8
Bore: 2.5
Shaft Dia: 1
NPT Port Size: 1/4
Mount: TF
Stroke: 6
Series: MA