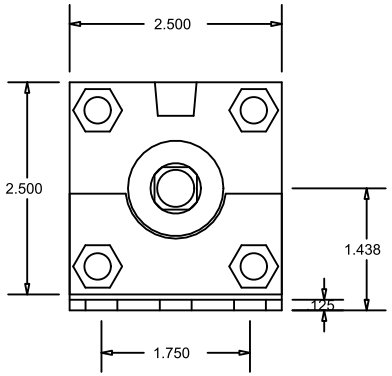

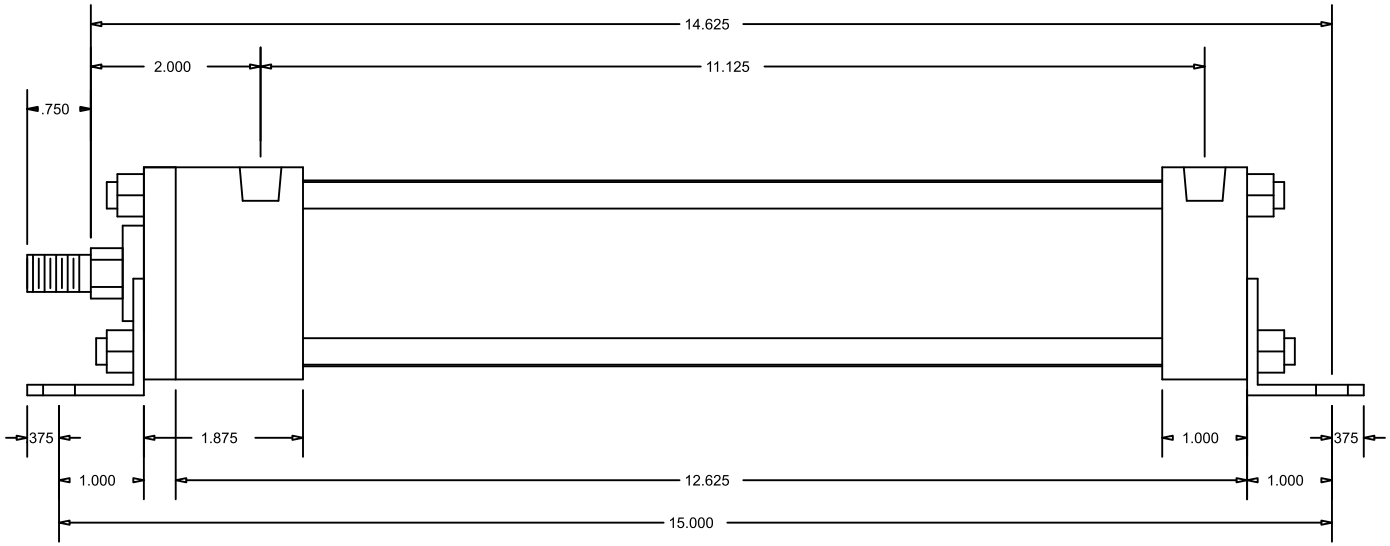

CylindersNow.com
Model No: CN2MAFB9NC
Logia No: CN2MAFB9NC
Rod End Thread: Male 7/16 - 20 x 3/4
Bore: 2
Shaft Dia: 5/8
NPT Port Size: 1/4
Mount: FB
Stroke: 9
Series: MA
Mount Bolt Size: 7/16