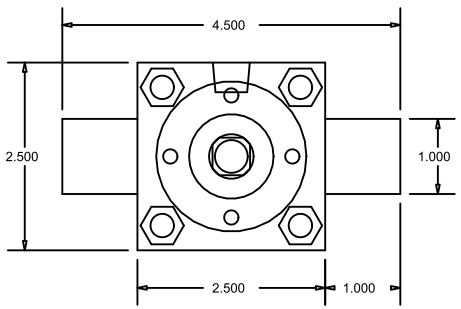

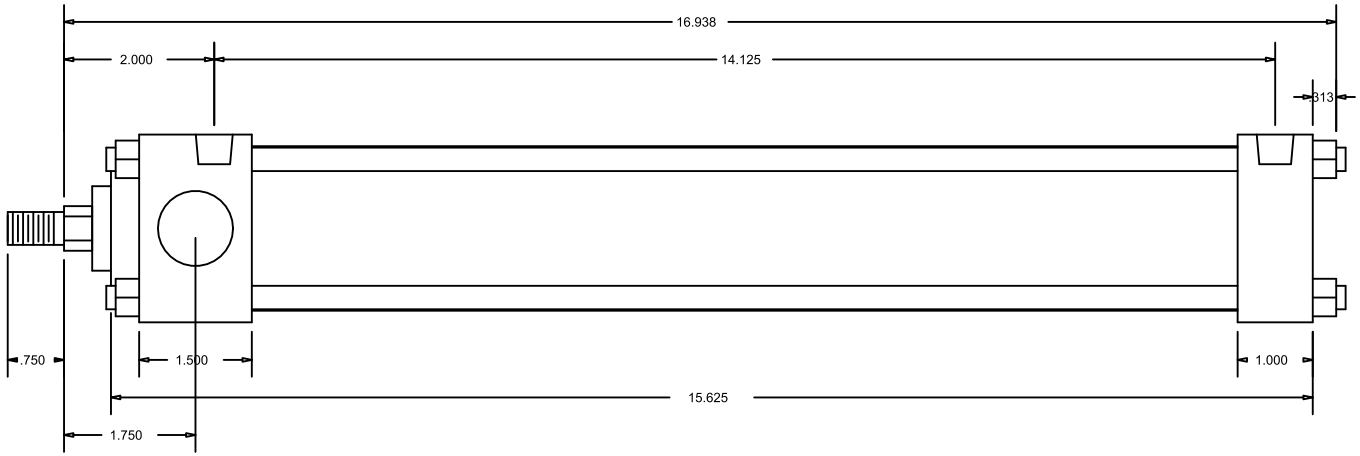

CylindersNow.com
Model No: CN2MATF12CC
Logia No: CN2MATF12CC
Rod End Thread: Male 7/16 - 20 x 3/4
Bore: 2
Shaft Dia: 5/8
NPT Port Size: 1/4
Mount: TF
Stroke: 12
Series: MA