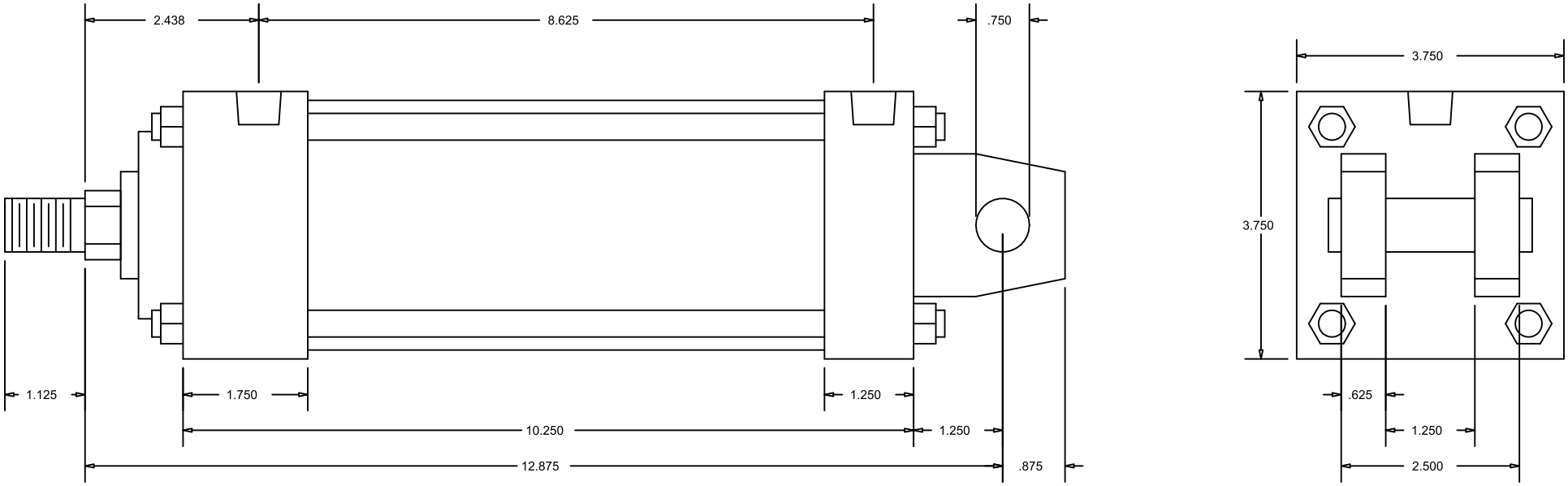

CylindersNow.com
Model No: CN325MAC6NC
Logia No: CN325MAC6NC
Rod End Thread: Male 3/4 - 16 x 1-1/8
Bore: 3.25
Shaft Dia: 1
NPT Port Size: 3/8
Mount: C
Stroke: 6
Series: MA