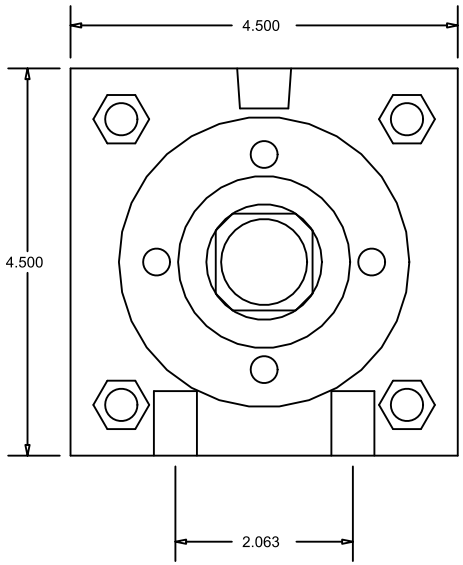

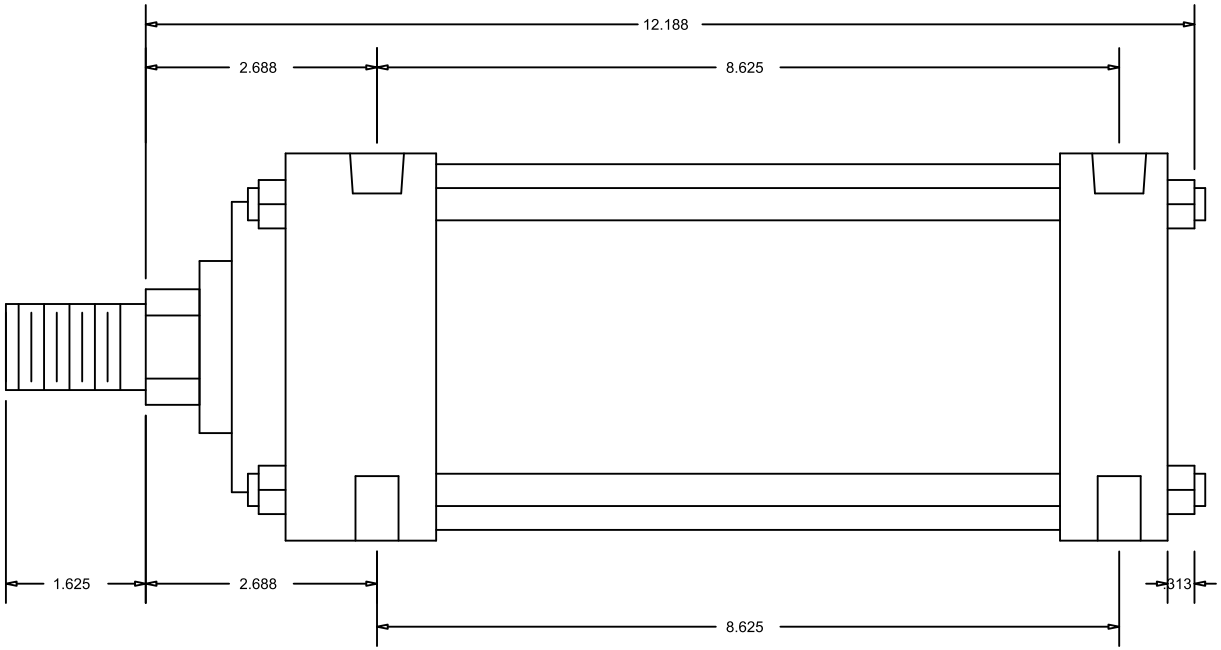

CylindersNow.com
Model No: CN4MASF6NCK1375
Logia No: CN4MASF6NCK1375
Rod End Thread: Male 1 - 14 x 1-5/8
Bore: 4
Shaft Dia: 1 3/8
NPT Port Size: 3/8
Mount: SF
Stroke: 6
Series: MA
Mount Bolt Size: 1/2-13