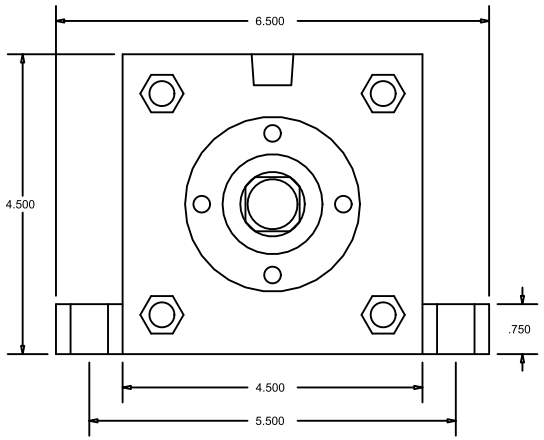

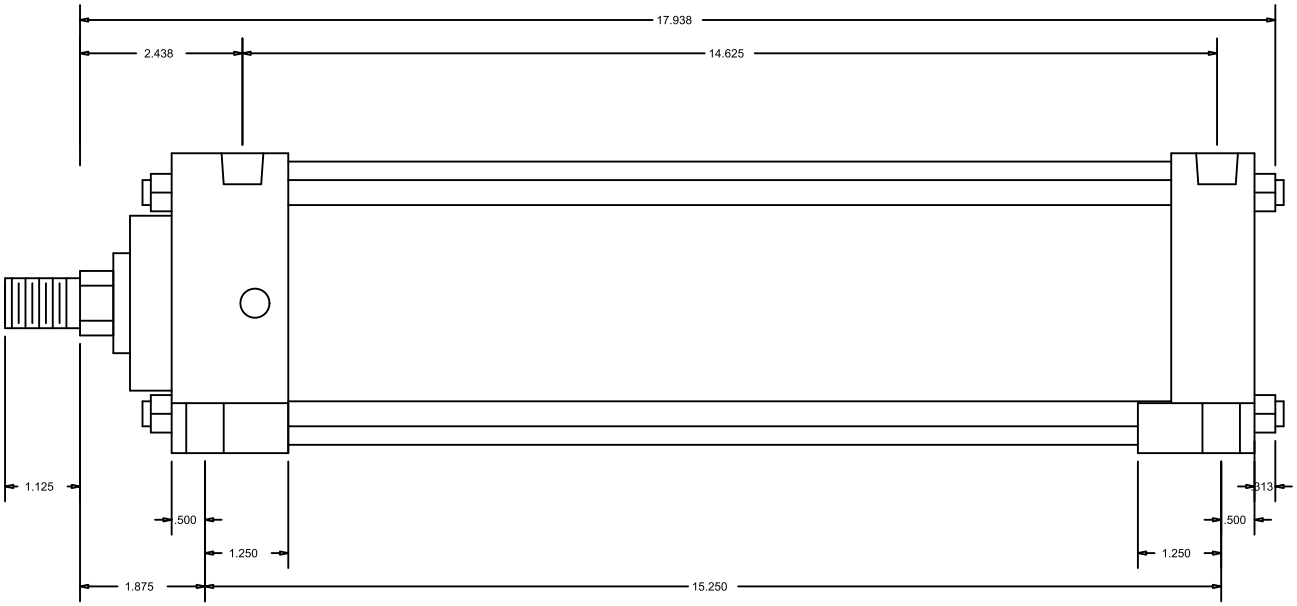

CylindersNow.com
Model No: CN4MASL12CC
Logia No: CN4MASL12CC
Rod End Thread: Male 3/4 - 16 x 1-1/8
Bore: 4
Shaft Dia: 1
NPT Port Size: 3/8
Mount: SL
Stroke: 12
Series: MA
Mount Bolt Size: 7/16