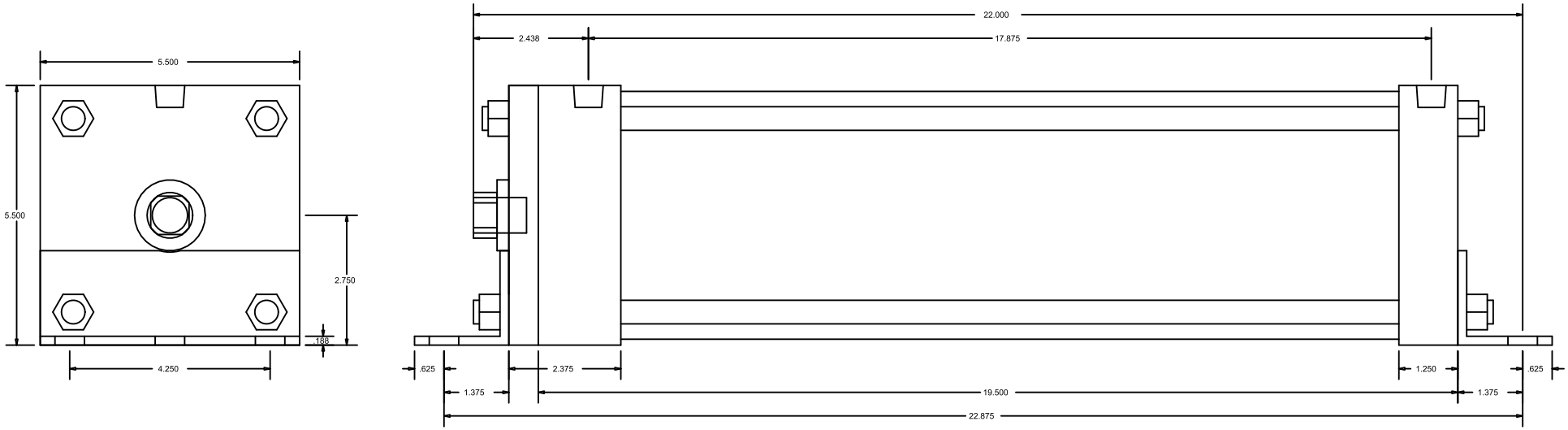

CylindersNow.com
Model No: CN5MAFB15NCKS4
Logia No: CN5MAFB15NCKS4
Rod End Thread: Female 3/4 - 16 x 1-1/8
Bore: 5
Shaft Dia: 1
NPT Port Size: 3/8
Mount: FB
Stroke: 15
Series: MA
Mount Bolt Size: 11/16