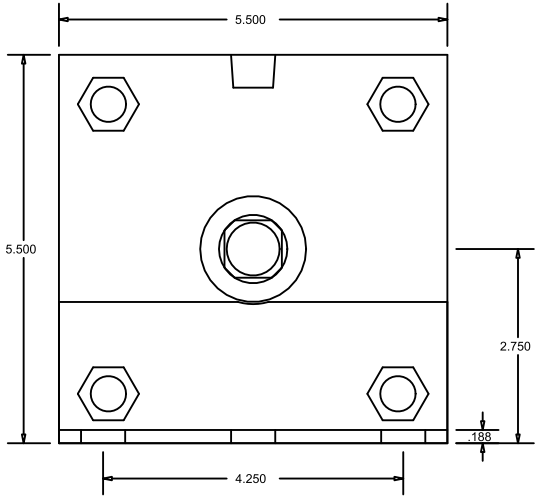

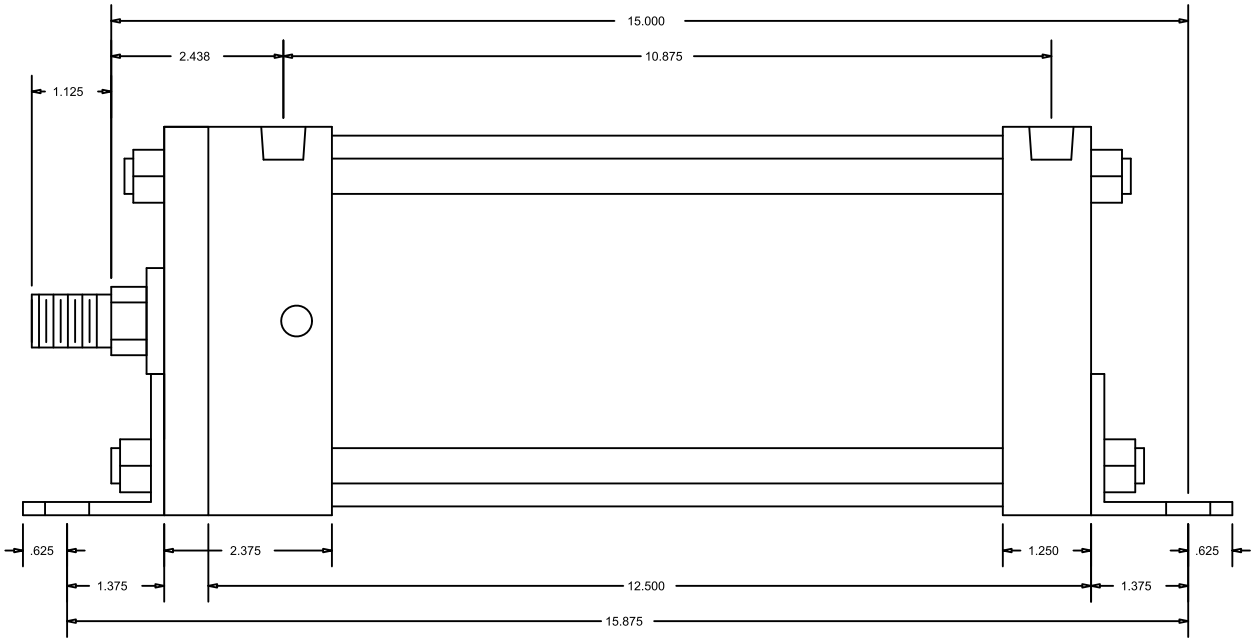

CylindersNow.com
Model No: CN5MAFB8CC
Logia No: CN5MAFB8CC
Rod End Thread: Male 3/4 - 16 x 1-1/8
Bore: 5
Shaft Dia: 1
NPT Port Size: 3/8
Mount: FB
Stroke: 8
Series: MA
Mount Bolt Size: 11/16