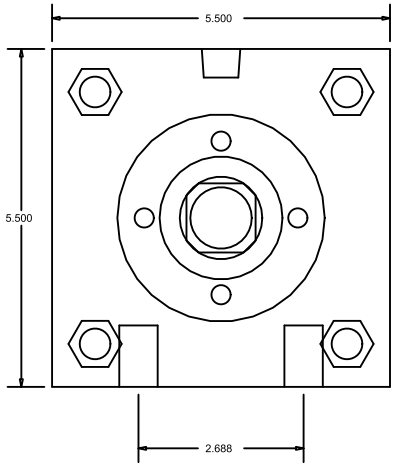

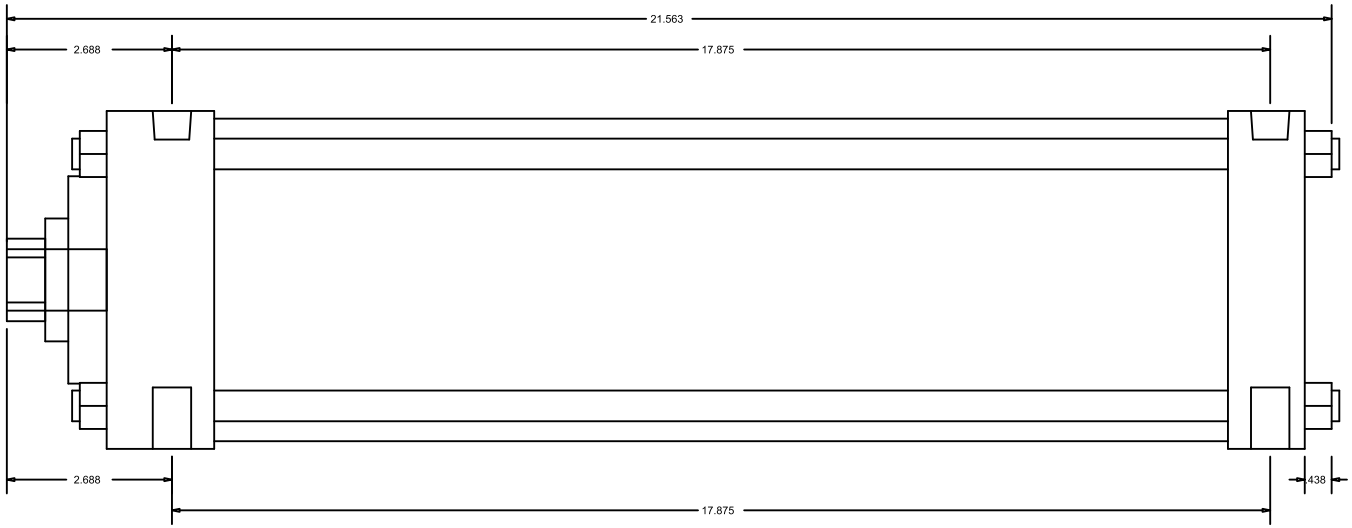

CylindersNow.com
Model No: CN5MASF15NCK1375S4
Logia No: CN5MASF15NCK1375S4
Rod End Thread: Female 1 - 14 x 1-5/8
Bore: 5
Shaft Dia: 1 3/8
NPT Port Size: 3/8
Mount: SF
Stroke: 15
Series: MA
Mount Bolt Size: 5/8-11