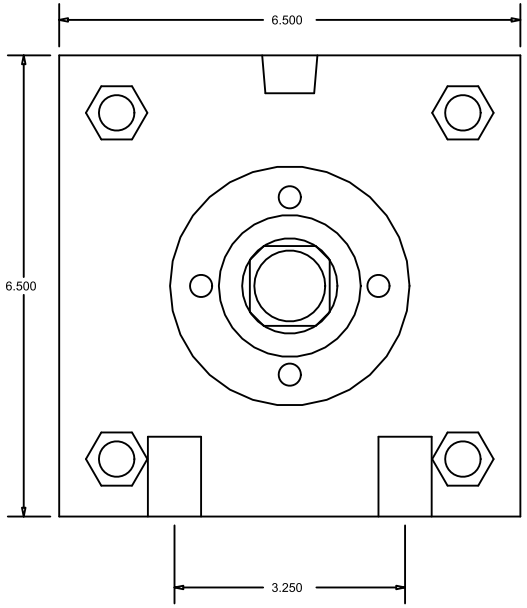

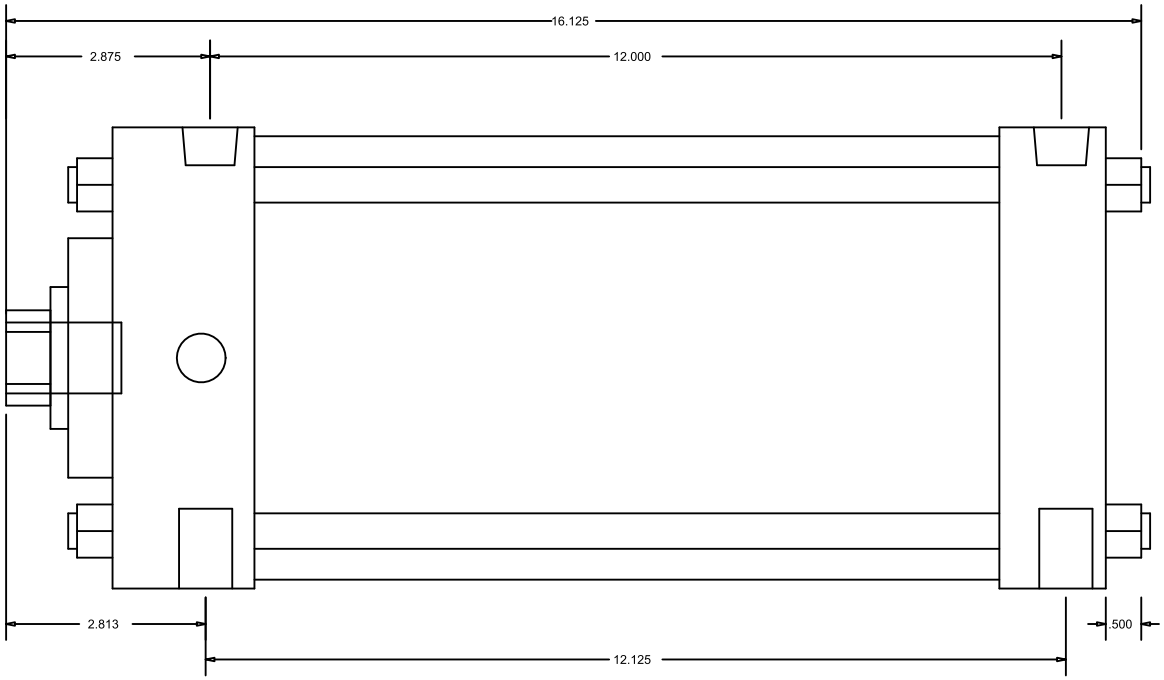

CylindersNow.com
Model No: CN6MASF9CCKS4
Logia No: CN6MASF9CCKS4
Rod End Thread: Female 1 - 14 x 1-5/8
Bore: 6
Shaft Dia: 1 3/8
NPT Port Size: 1/2
Mount: SF
Stroke: 9
Series: MA
Mount Bolt Size: 3/4-10