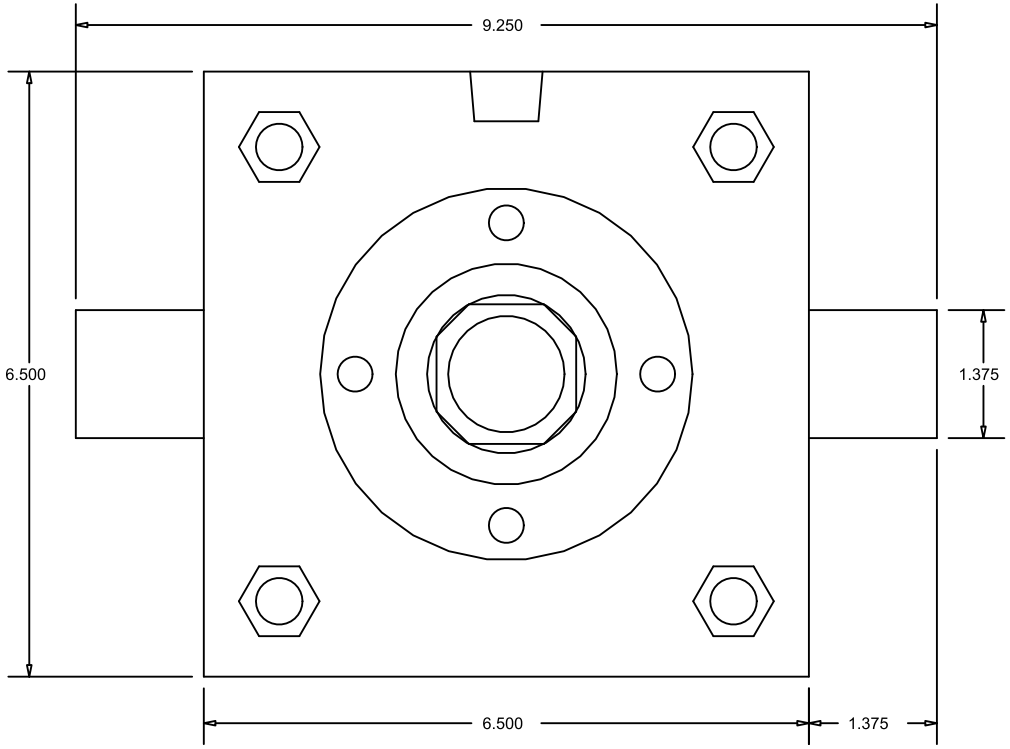

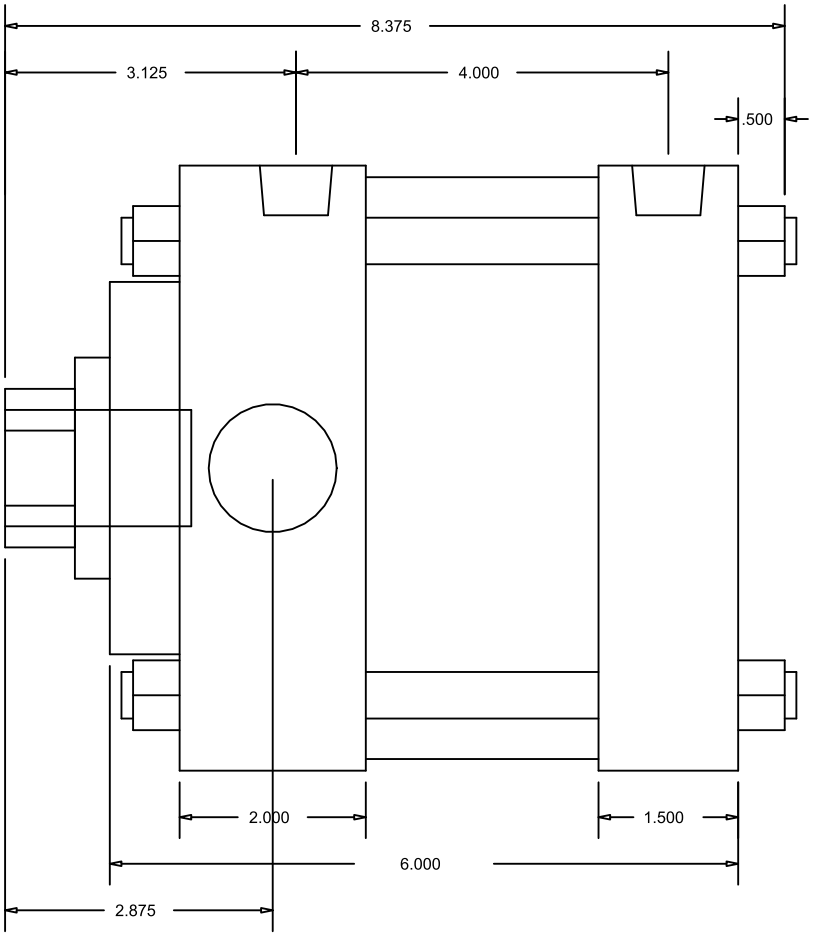

CylindersNow.com
Model No: CN6MATF1NCK175S4
Logia No: CN6MATF1NCK175S4
Rod End Thread: Female 1-1/4 - 12 x 2
Bore: 6
Shaft Dia: 1 3/4
NPT Port Size: 1/2
Mount: TF
Stroke: 1
Series: MA