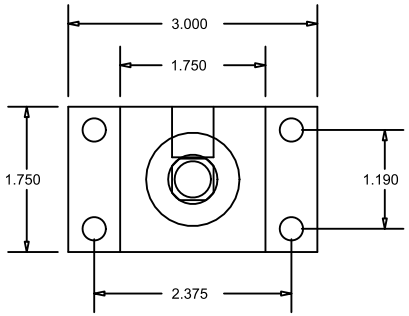

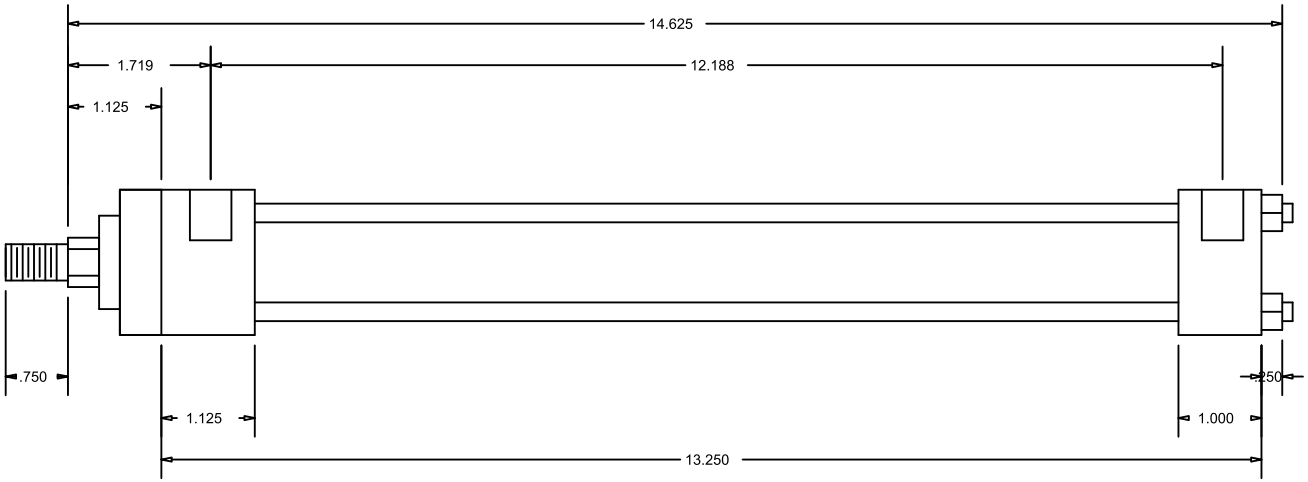

CylindersNow.com
Model No: CN1125MHFHF10NC
Part No: CN1125MHFHF10NC
Rod End Thread: Male 7/16 - 20 x 3/4
Bore: 1.125
Piston Rod Diameter: 5/8
SAE Port Size: -6
Mount: FHF
Stroke: 10
Series: MH
Mount Bolt Size: 1/4