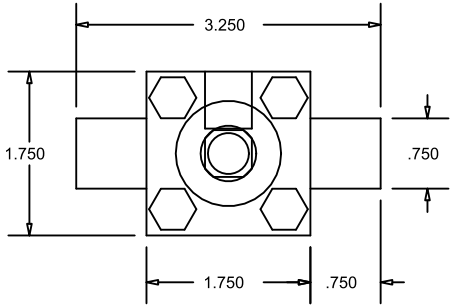

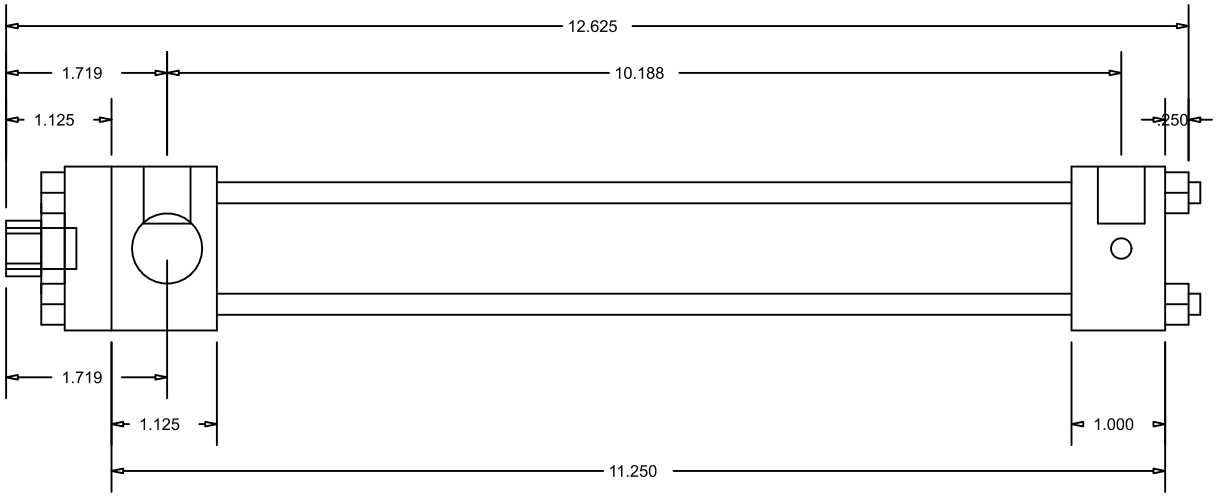

CylindersNow.com
Model No: CN1125MHTF8CCKS4
Part No: CN1125MHTF8CCKS4
Rod End Thread: Female 7/16 - 20 x 3/4
Bore: 1.125
Piston Rod Diameter: 5/8
SAE Port Size: -6
Mount: TF
Stroke: 8
Series: MH