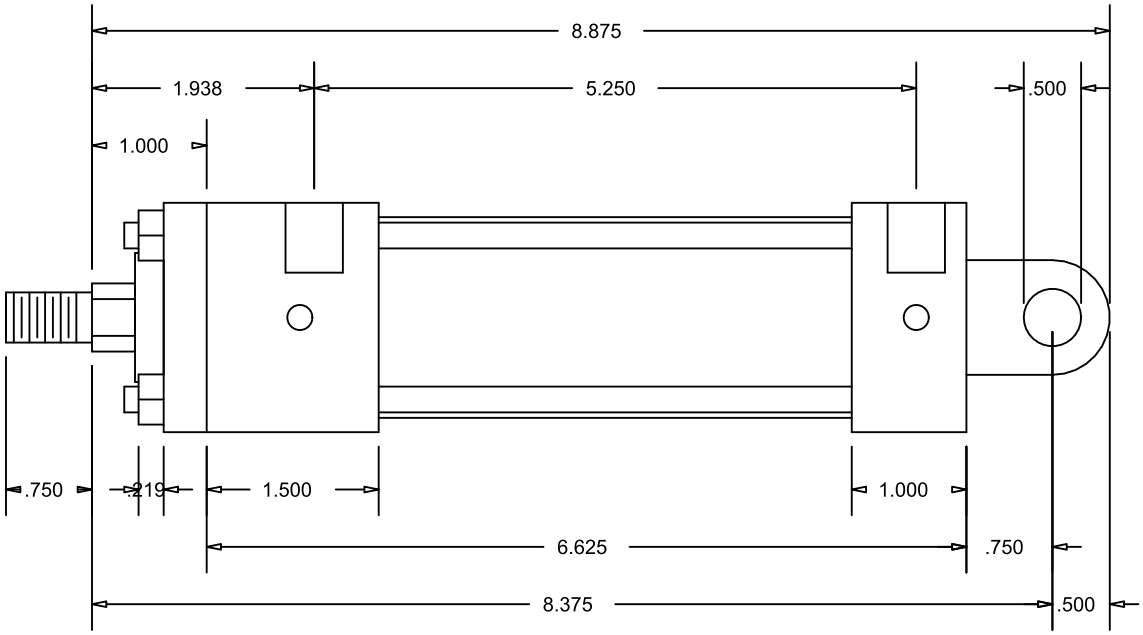

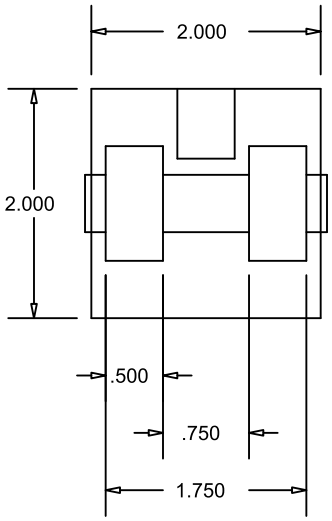

CylindersNow.com
Model No: CN15MHC3CC
Part No: CN15MHC3CC
Rod End Thread: Male 7/16 - 20 x 3/4
Bore: 1.5
Piston Rod Diameter: 5/8
SAE Port Size: -6
Mount: C
Stroke: 3
Series: MH