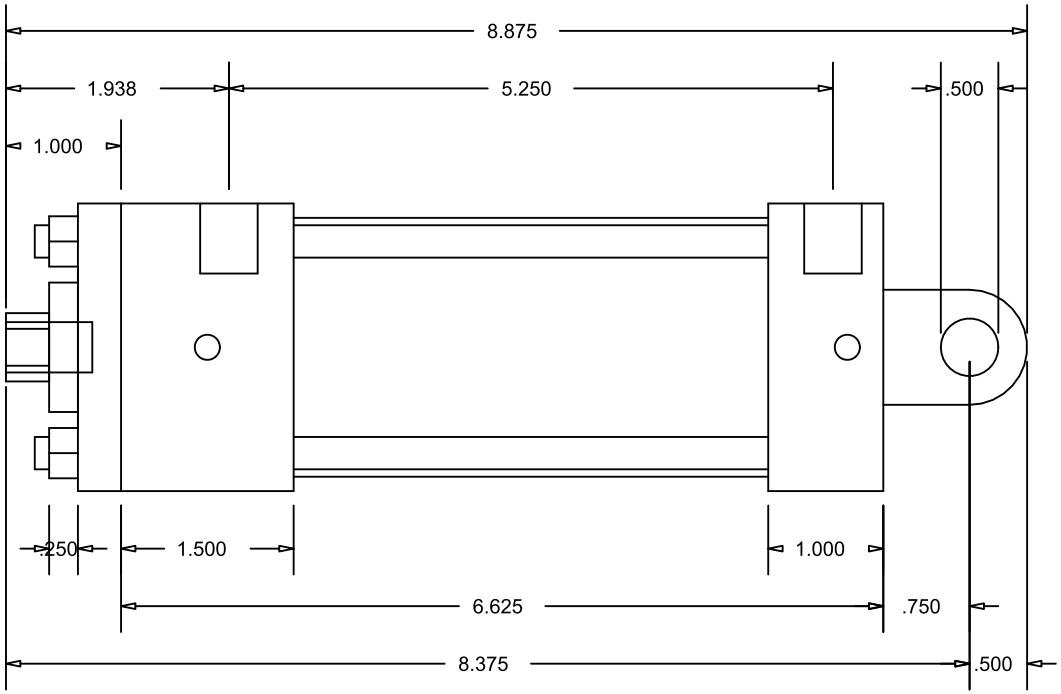

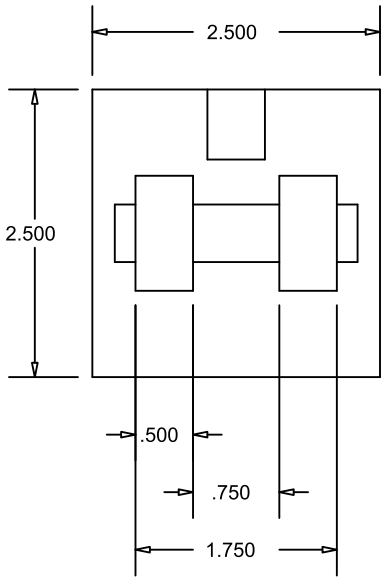

CylindersNow.com
Model No: CN2MHC3CCKS4
Part No: CN2MHC3CCKS4
Rod End Thread: Female 7/16 - 20 x 3/4
Bore: 2
Piston Rod Diameter: 5/8
SAE Port Size: -6
Mount: C
Stroke: 3
Series: MH