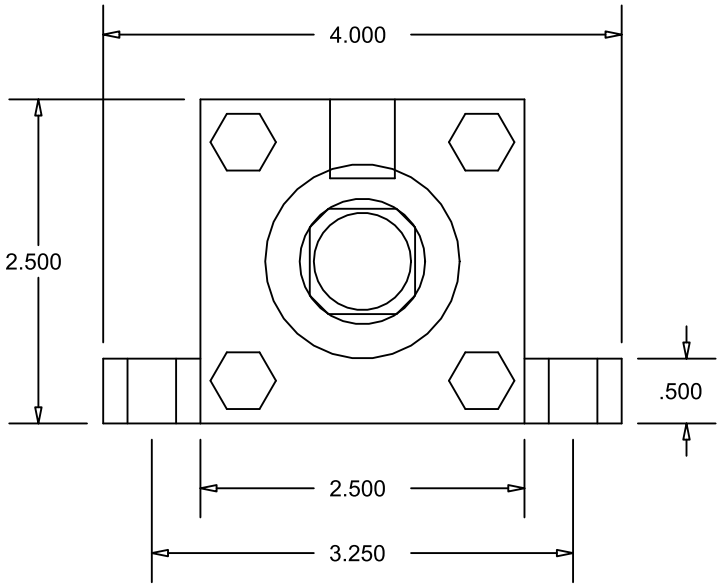

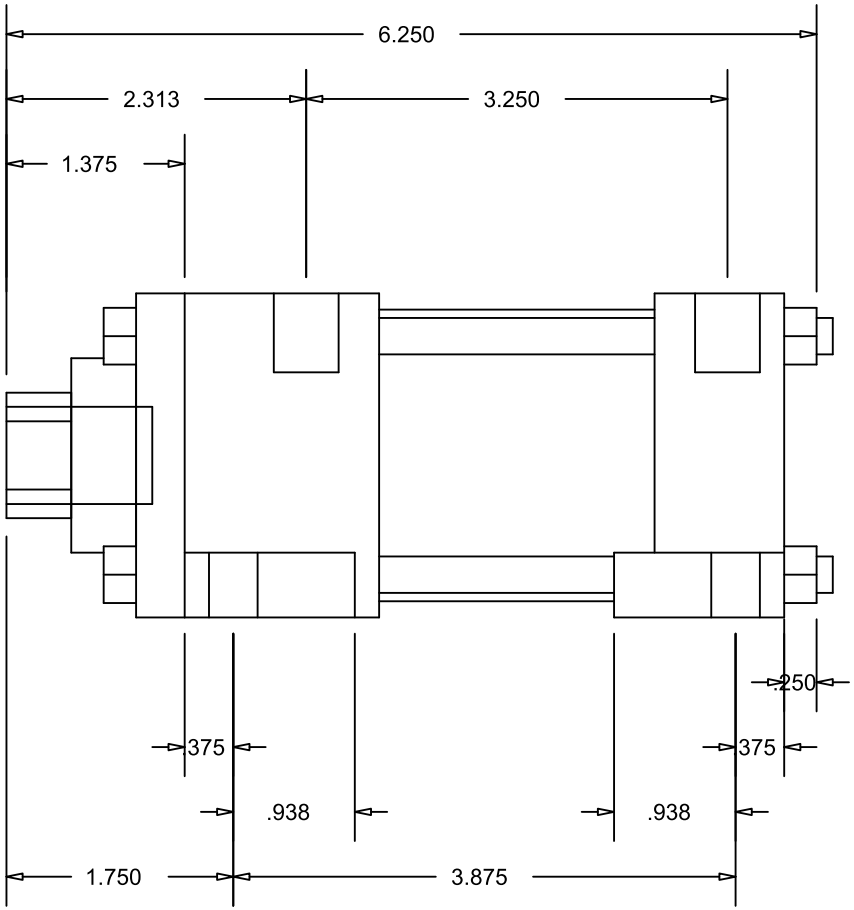

CylindersNow.com
Model No: CN2MHSL1NCK1S4
Part No: CN2MHSL1NCK1S4
Rod End Thread: Female 3/4 - 16 x 1-1/8
Bore: 2
Piston Rod Diameter: 1
SAE Port Size: -6
Mount: SL
Stroke: 1
Series: MH
Mount Bolt Size: 5/16