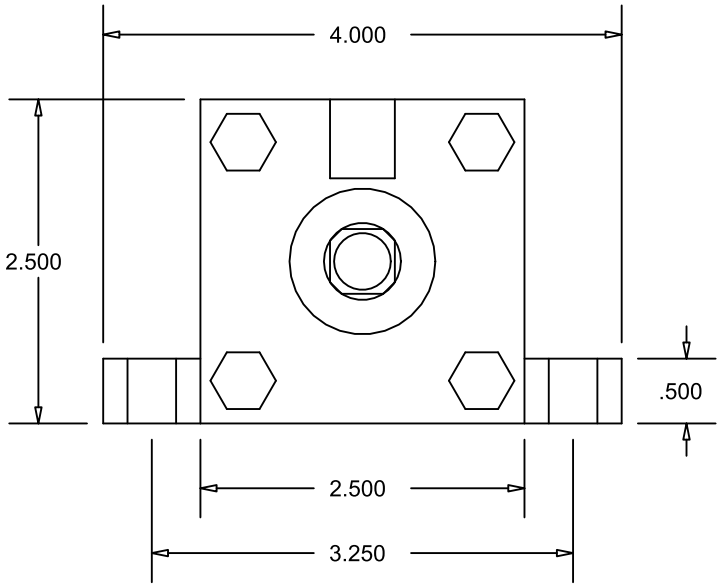

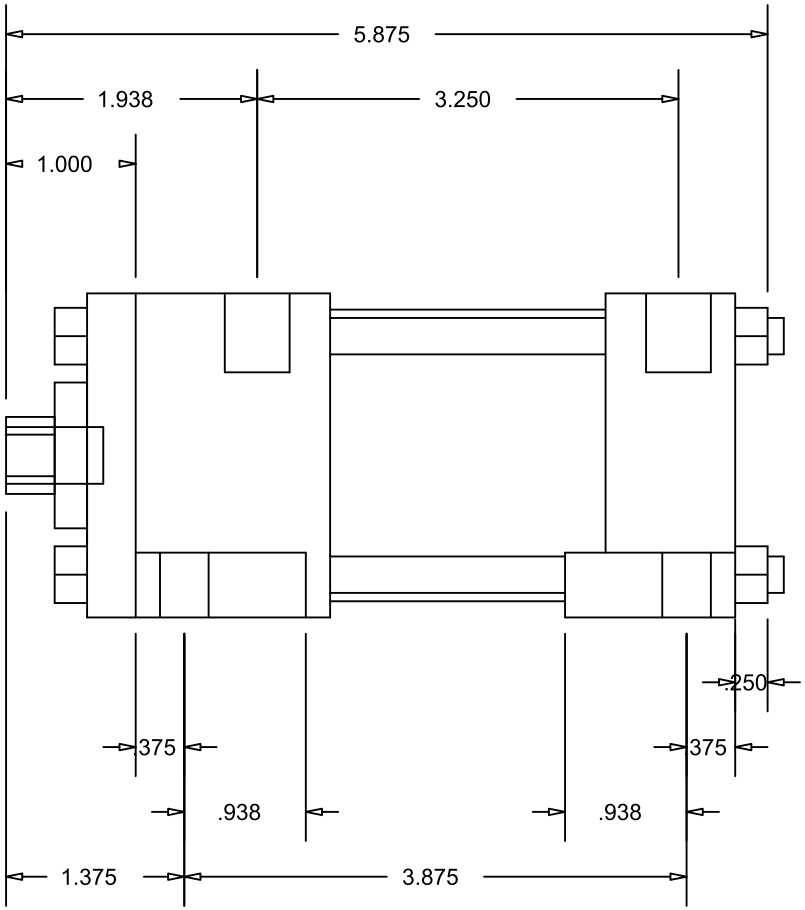

CylindersNow.com
Model No: CN2MHSL1NCKS4
Part No: CN2MHSL1NCKS4
Rod End Thread: Female 7/16 - 20 x 3/4
Bore: 2
Piston Rod Diameter: 5/8
SAE Port Size: -6
Mount: SL
Stroke: 1
Series: MH
Mount Bolt Size: 5/16