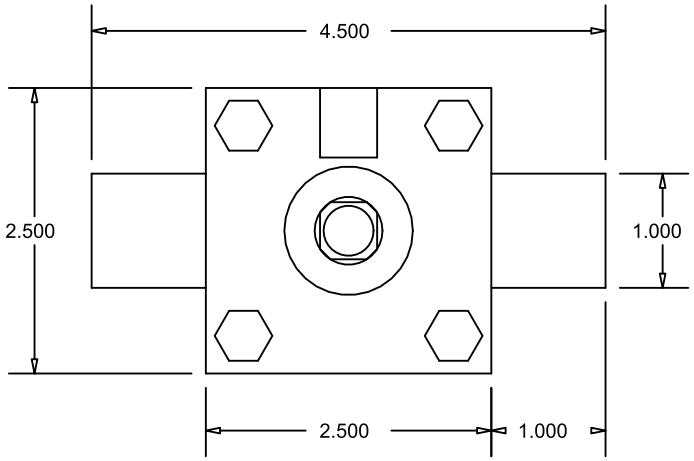

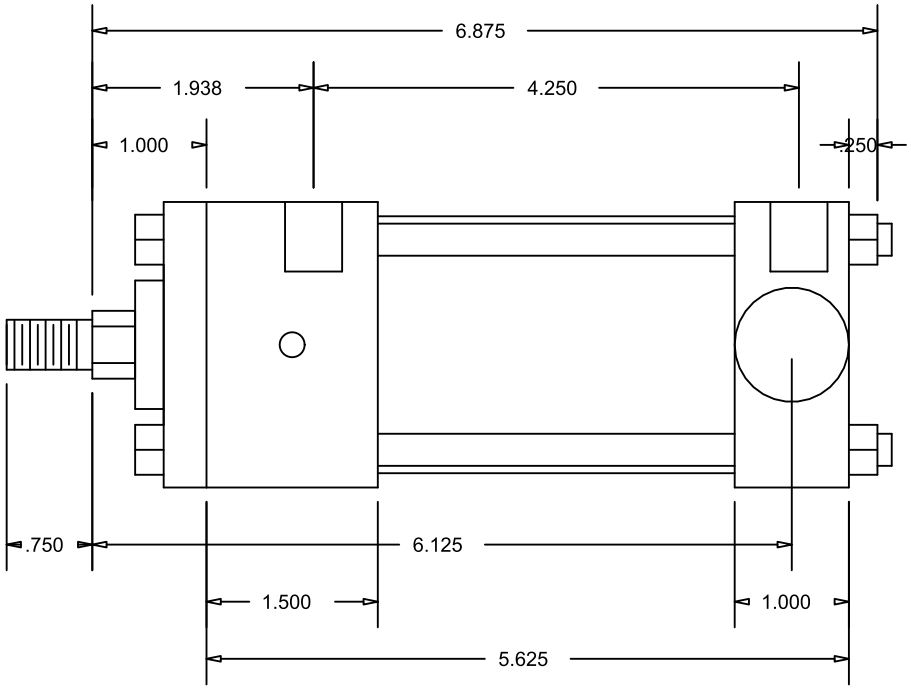

CylindersNow.com
Model No: CN2MHTR2CC
Part No: CN2MHTR2CC
Rod End Thread: Male 7/16 - 20 x 3/4
Bore: 2
Piston Rod Diameter: 5/8
SAE Port Size: -6
Mount: TR
Stroke: 2
Series: MH