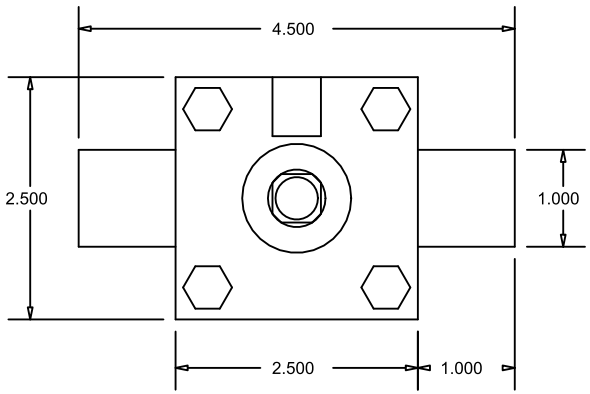

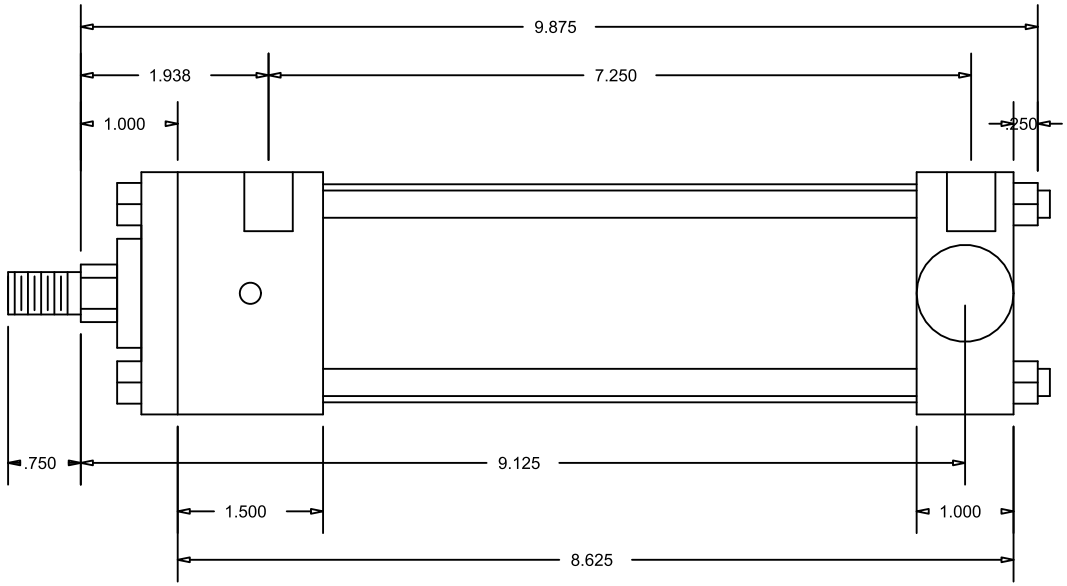

CylindersNow.com
Model No: CN2MHTR5CC
Part No: CN2MHTR5CC
Rod End Thread: Male 7/16 - 20 x 3/4
Bore: 2
Piston Rod Diameter: 5/8
SAE Port Size: -6
Mount: TR
Stroke: 5
Series: MH