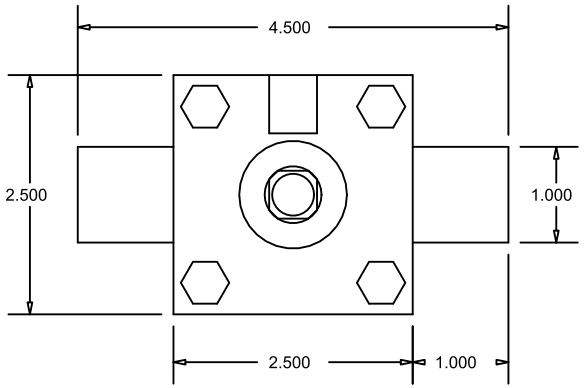

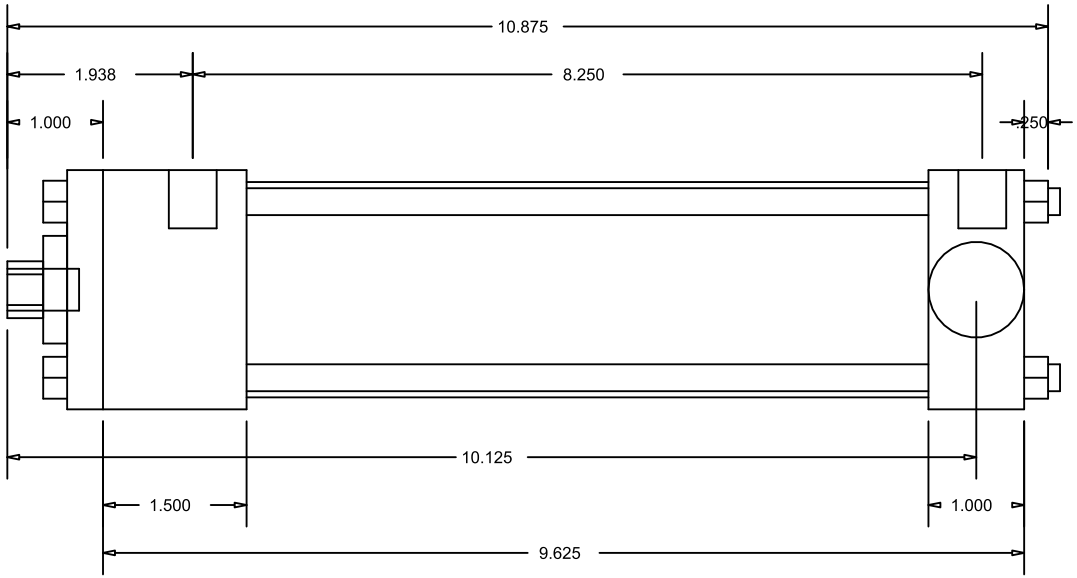

CylindersNow.com
Model No: CN2MHTR6NCKS4
Part No: CN2MHTR6NCKS4
Rod End Thread: Female 7/16 - 20 x 3/4
Bore: 2
Piston Rod Diameter: 5/8
SAE Port Size: -6
Mount: TR
Stroke: 6
Series: MH