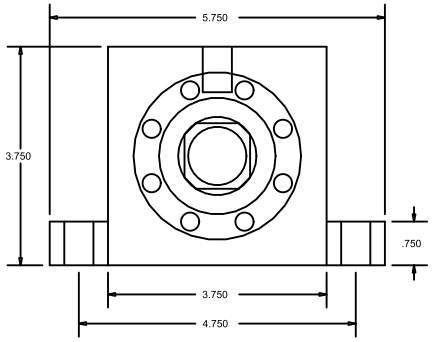

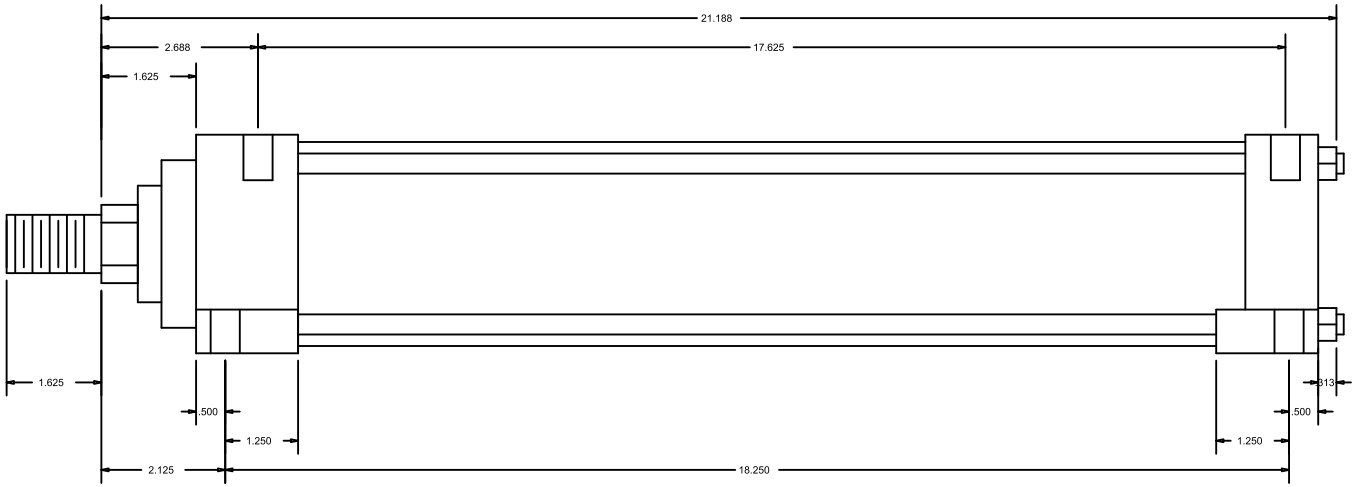

CylindersNow.com
Model No: CN325MHSL15NCK1375
Part No: CN325MHSL15NCK1375
Rod End Thread: Male 1 - 14 x 1-5/8
Bore: 3.25
Piston Rod Diameter: 1 3/8
SAE Port Size: -10
Mount: SL
Stroke: 15
Series: MH
Mount Bolt Size: 3/8