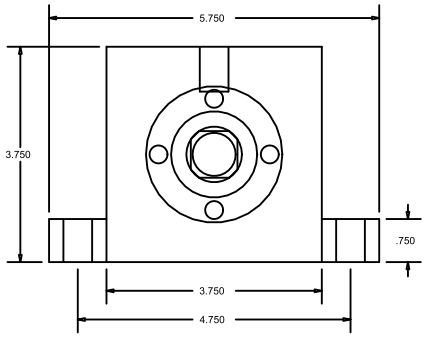

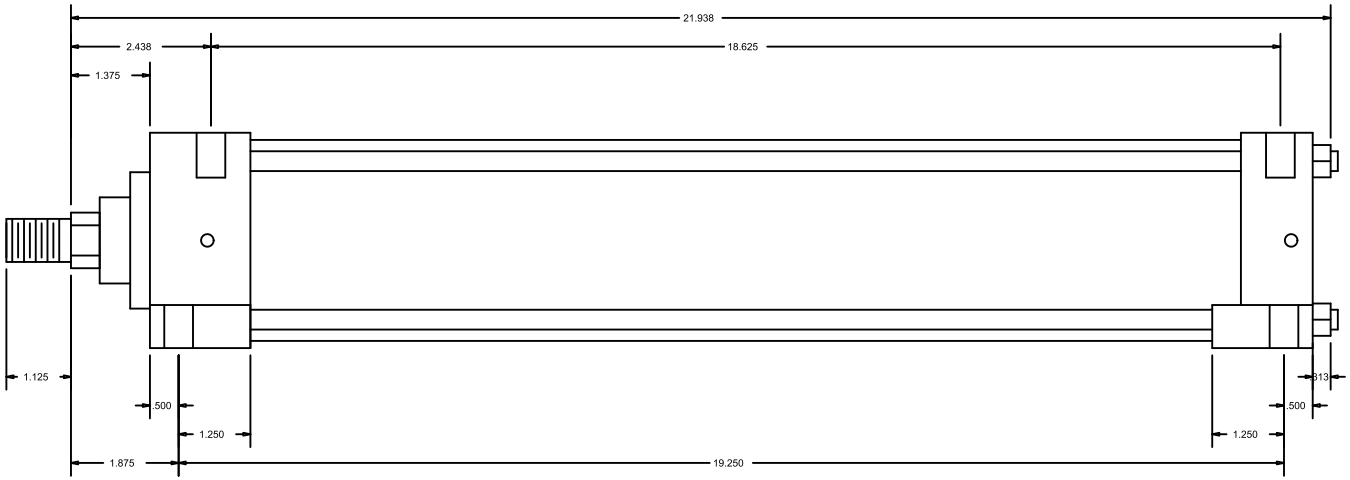

CylindersNow.com
Model No: CN325MHSL16CC
Part No: CN325MHSL16CC
Rod End Thread: Male 3/4 - 16 x 1-1/8
Bore: 3.25
Piston Rod Diameter: 1
SAE Port Size: -10
Mount: SL
Stroke: 16
Series: MH
Mount Bolt Size: 3/8