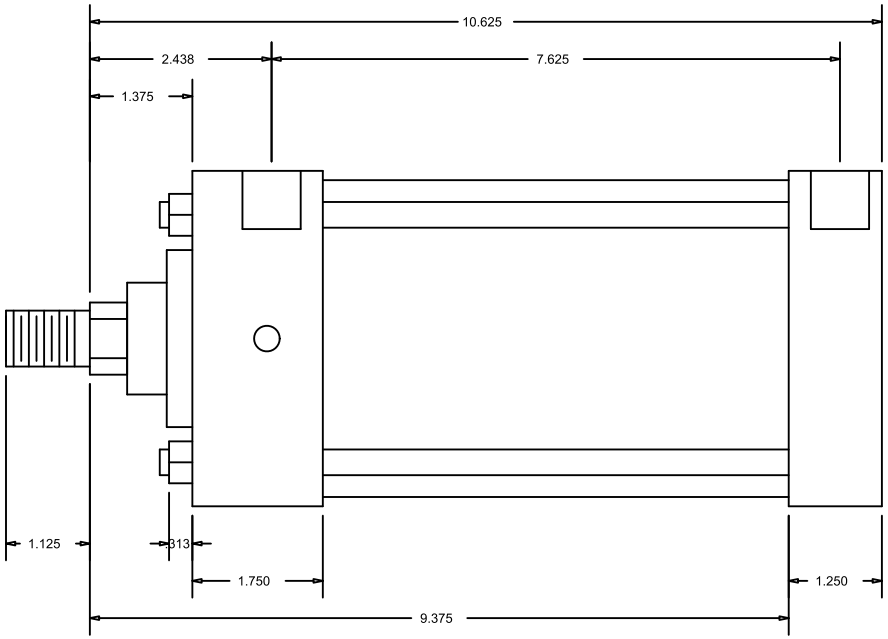

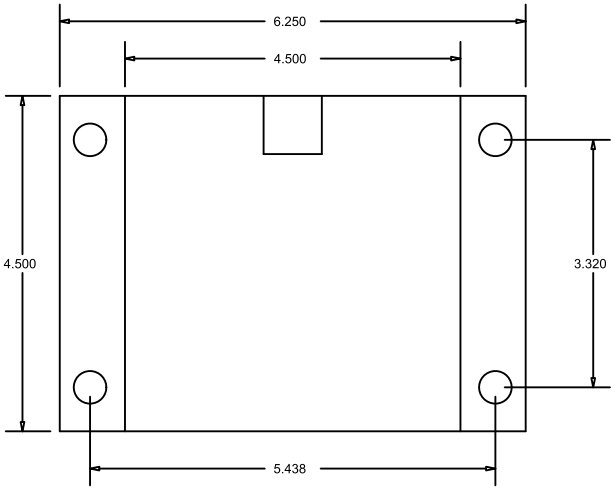

CylindersNow.com
Model No: CN4MHRHF5CC
Part No: CN4MHRHF5CC
Rod End Thread: Male 3/4 - 16 x 1-1/8
Bore: 4
Piston Rod Diameter: 1
SAE Port Size: -10
Mount: RHF
Stroke: 5
Series: MH
Mount Bolt Size: 3/8