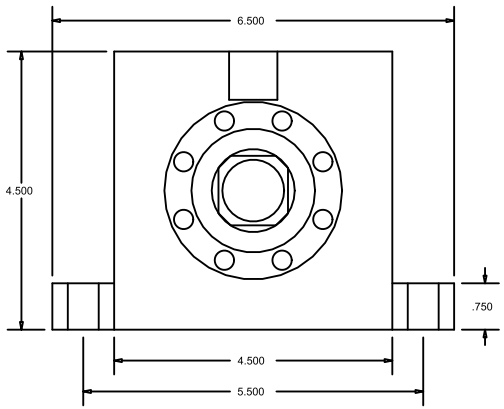

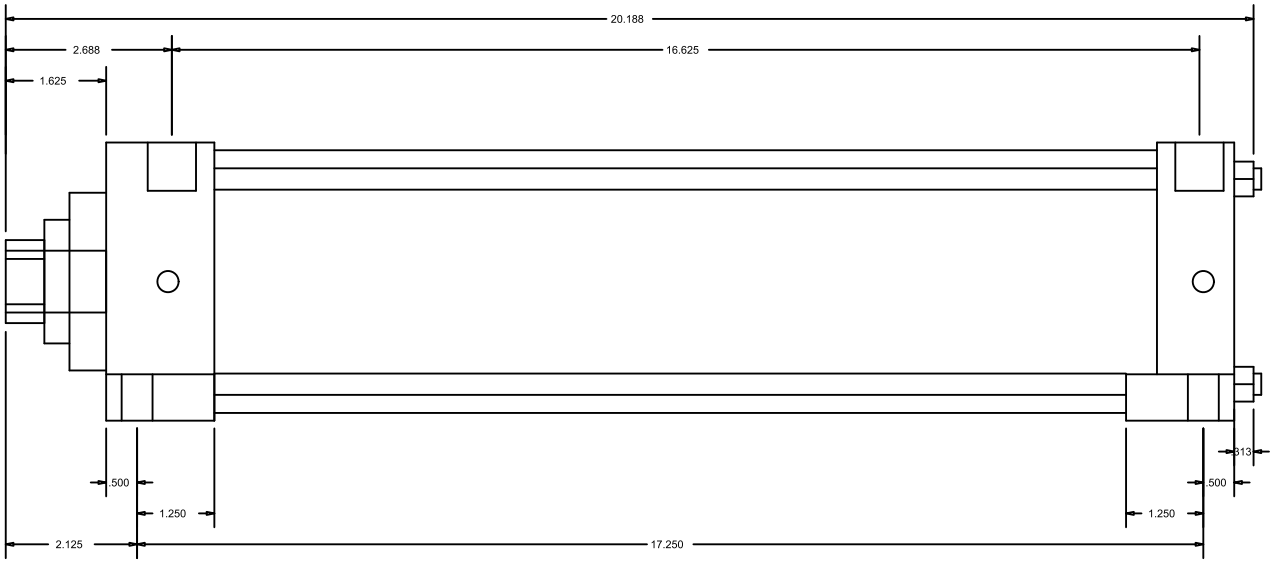

CylindersNow.com
Model No: CN4MHSL14CCK1375S4
Part No: CN4MHSL14CCK1375S4
Rod End Thread: Female 1 - 14 x 1-5/8
Bore: 4
Piston Rod Diameter: 1 3/8
SAE Port Size: -10
Mount: SL
Stroke: 14
Series: MH
Mount Bolt Size: 3/8