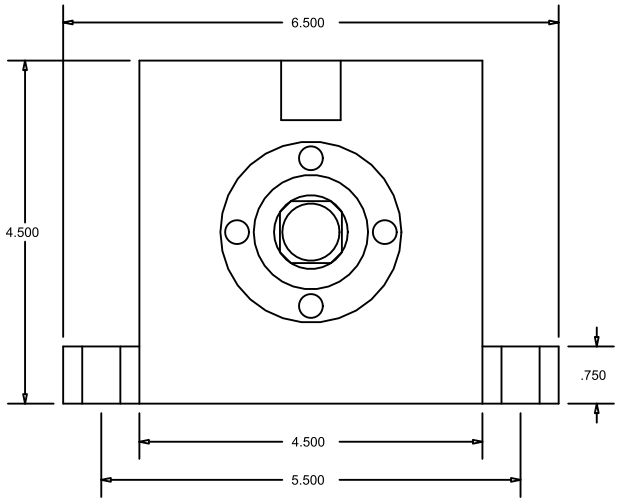

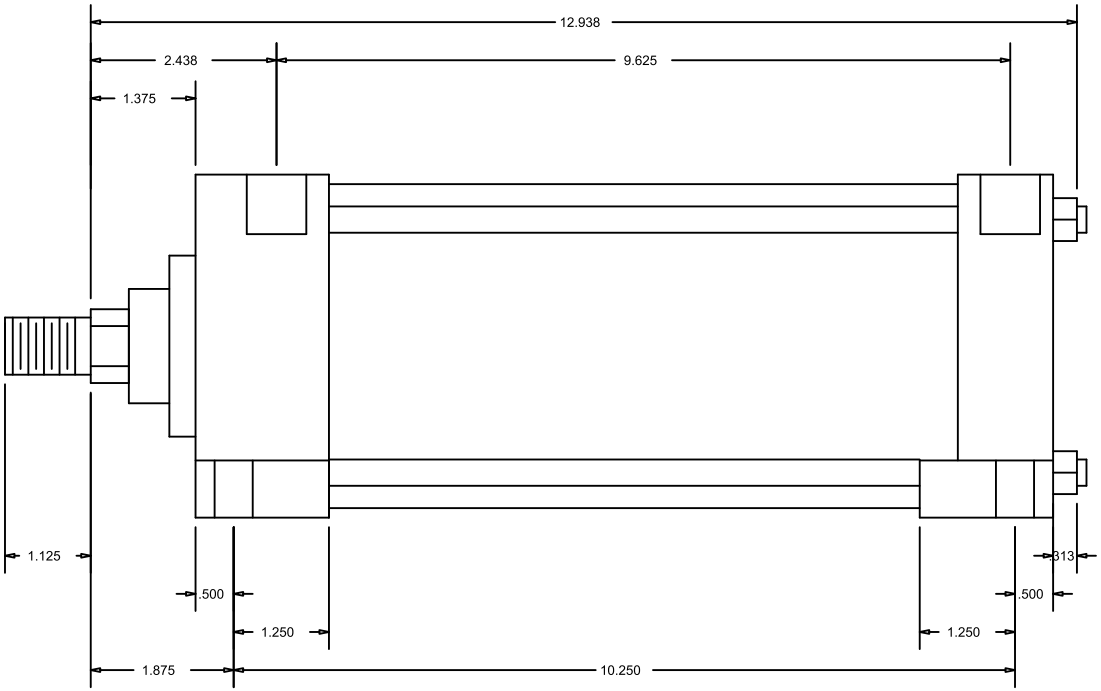

CylindersNow.com
Model No: CN4MHSL7NC
Part No: CN4MHSL7NC
Rod End Thread: Male 3/4 - 16 x 1-1/8
Bore: 4
Piston Rod Diameter: 1
SAE Port Size: -10
Mount: SL
Stroke: 7
Series: MH
Mount Bolt Size: 3/8