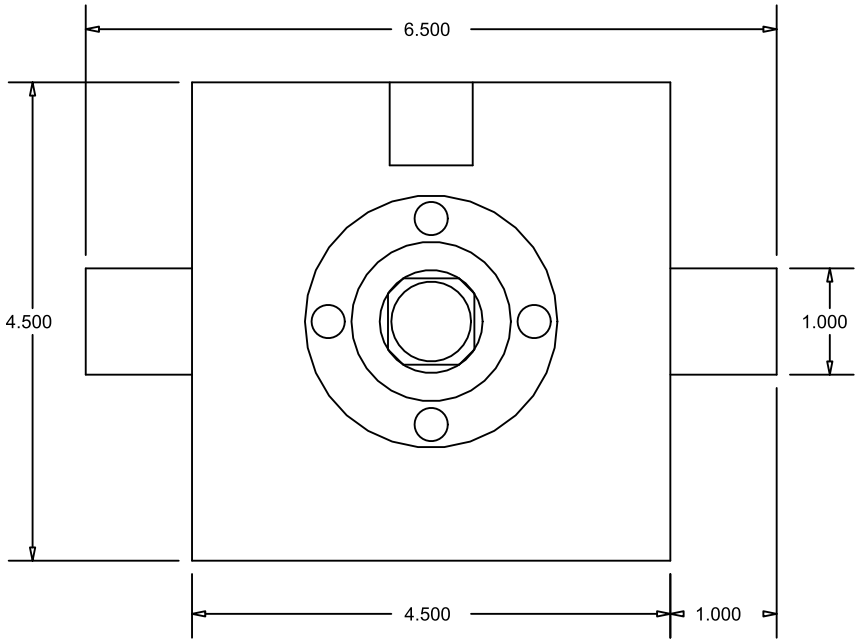

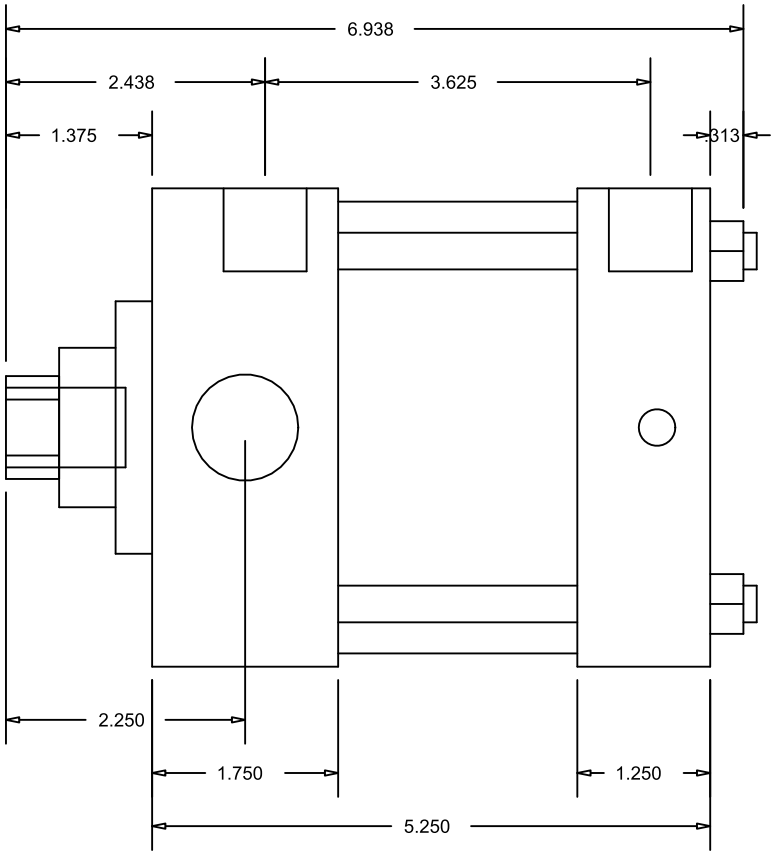

CylindersNow.com
Model No: CN4MHTF1CCKS4
Part No: CN4MHTF1CCKS4
Rod End Thread: Female 3/4 - 16 x 1-1/8
Bore: 4
Piston Rod Diameter: 1
SAE Port Size: -10
Mount: TF
Stroke: 1
Series: MH