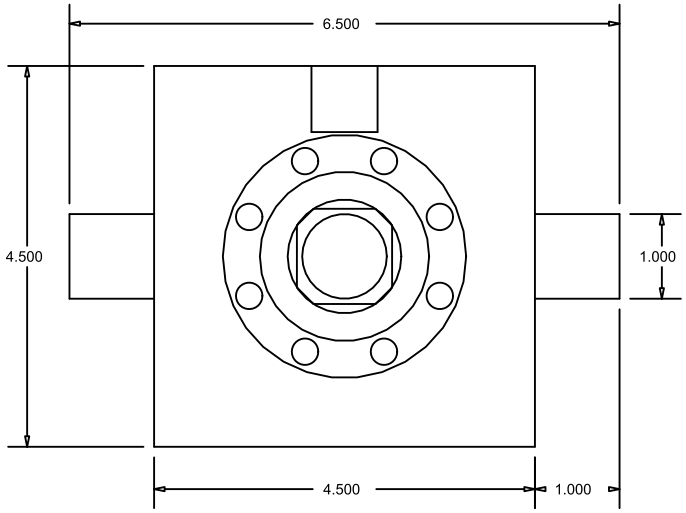

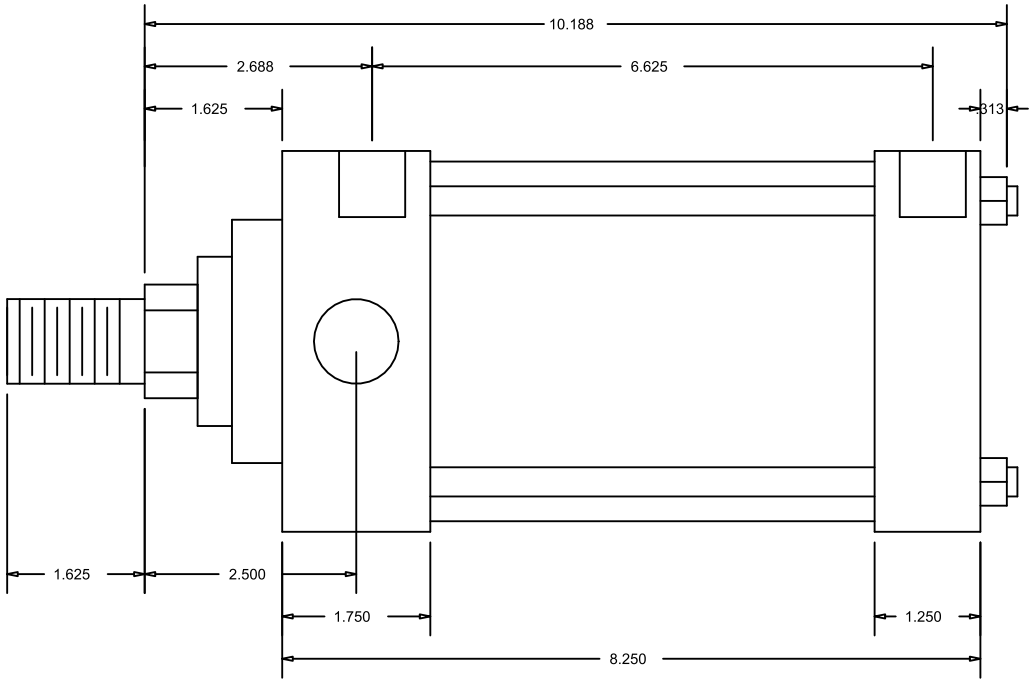

CylindersNow.com
Model No: CN4MHTF4NCK1375
Part No: CN4MHTF4NCK1375
Rod End Thread: Male 1 - 14 x 1-5/8
Bore: 4
Piston Rod Diameter: 1 3/8
SAE Port Size: -10
Mount: TF
Stroke: 4
Series: MH