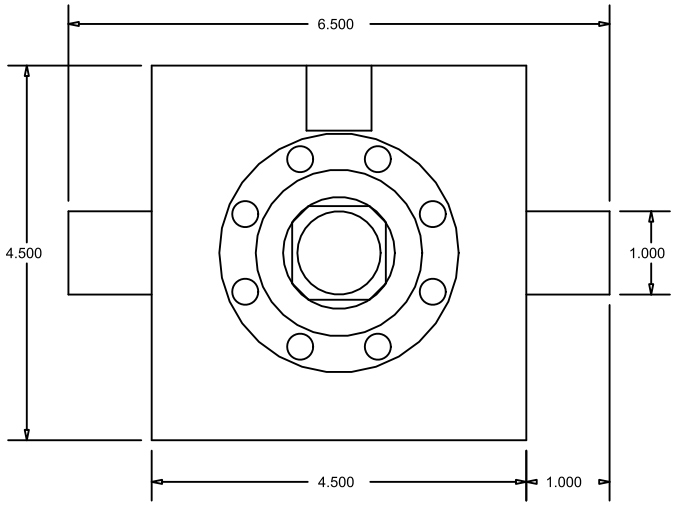

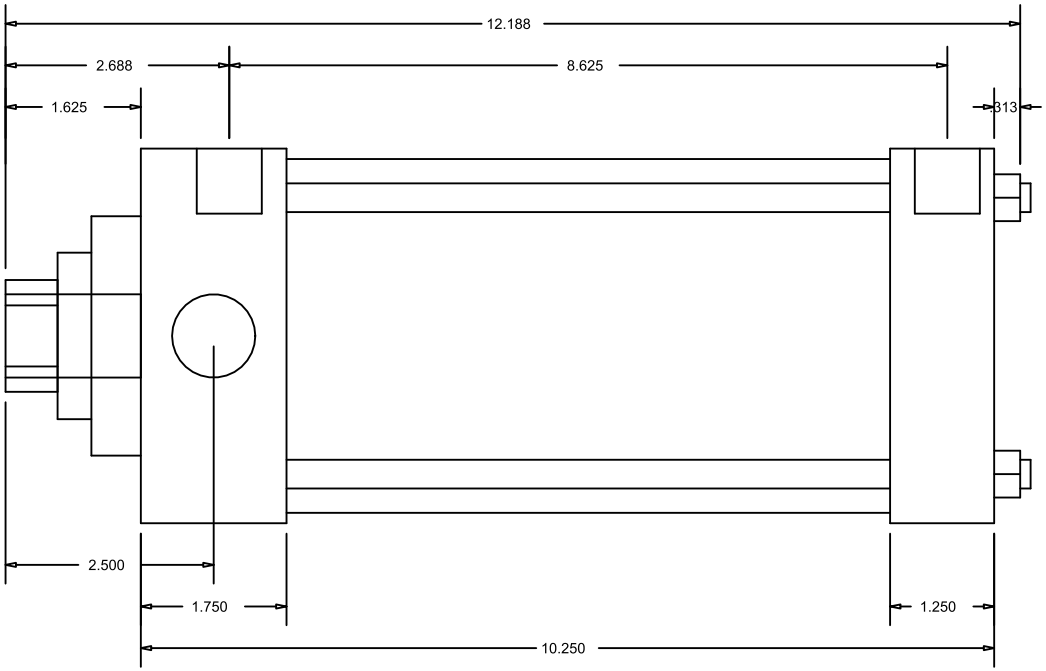

CylindersNow.com
Model No: CN4MHTF6NCK1375S4
Part No: CN4MHTF6NCK1375S4
Rod End Thread: Female 1 - 14 x 1-5/8
Bore: 4
Piston Rod Diameter: 1 3/8
SAE Port Size: -10
Mount: TF
Stroke: 6
Series: MH