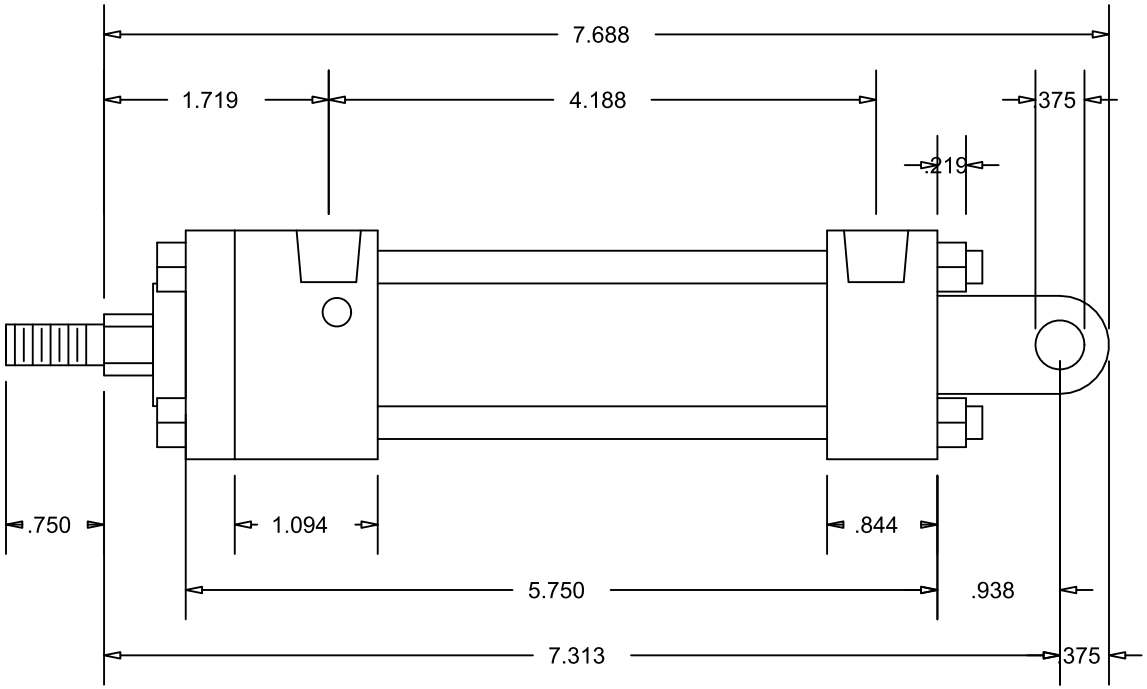

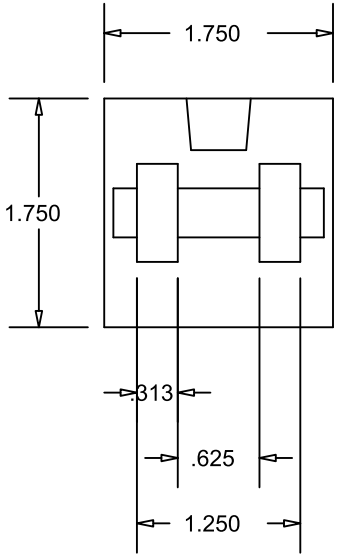

CylindersNow.com
Model No: CN1125AC2CC
Logia No: CN1125AC2CC
Rod End Thread: Male 5/16 - 24 x 3/4
Bore: 1.125"
Shaft Dia: 1/2"
NPT Port Size: 1/4
Mount: C
Stroke: 2
Series: A