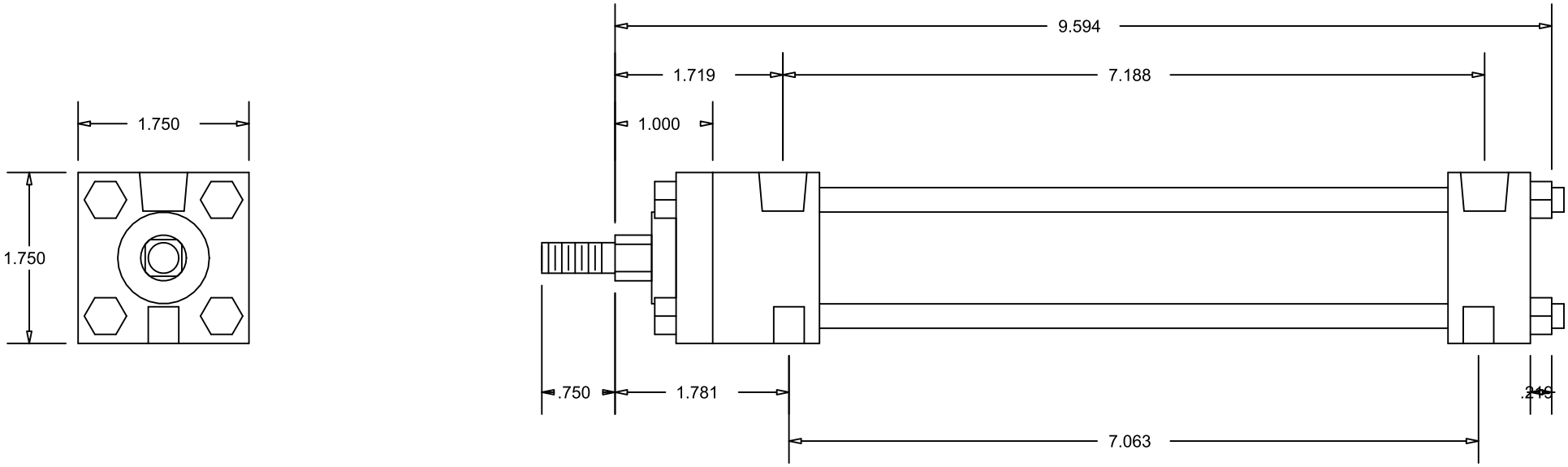


CylindersNow.com
Model No: CN1125ASF5NC
Logia No: CN1125ASF5NC
Rod End Thread: Male 5/16 - 24 x 3/4
Bore:  1.125"
Shaft Dia: 1/2"
NPT Port Size: 1/4
Mount: SF
Stroke: 5
Series: A
Mount Bolt Size: 5/16-18