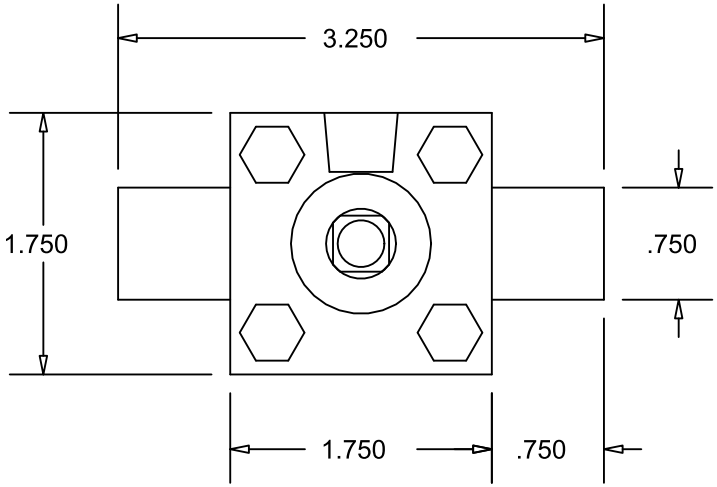

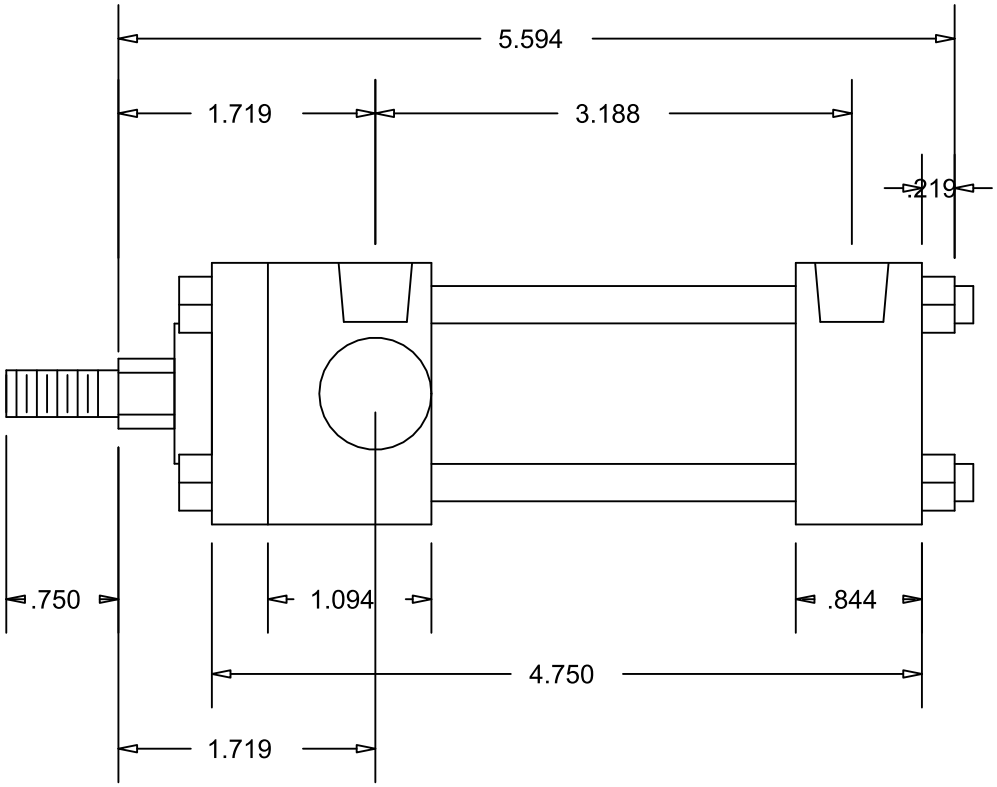

CylindersNow.com
Model No: CN1125ATF1NC
Logia No: CN1125ATF1NC
Rod End Thread: Male 5/16 - 24 x 3/4
Bore: 1.125"
Shaft Dia: 1/2"
NPT Port Size: 1/4
Mount: TF
Stroke: 1
Series: A