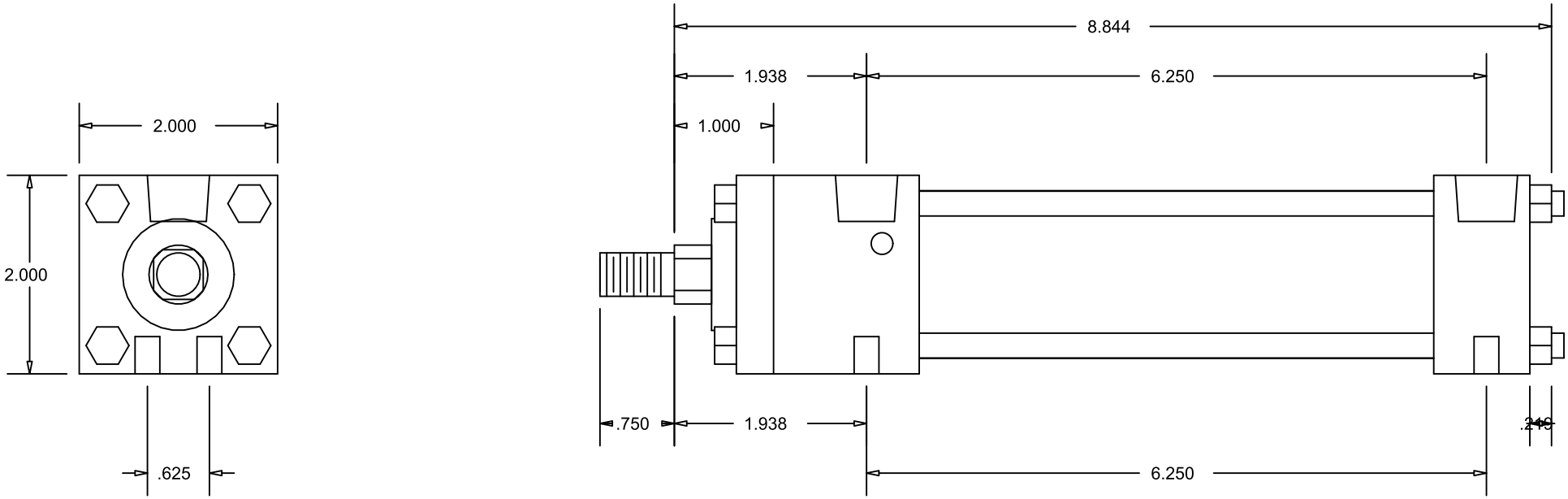

CylindersNow.com
Model No: CN15ASF4CC
Logia No: CN15ASF4CC
Rod End Thread: Male 7/16 - 20 x 3/4
Bore: 1.5"
Shaft Dia: 5/8"
NPT Port Size: 3/8
Mount: SF
Stroke: 4
Series: A
Mount Bolt Size: 1/4-20