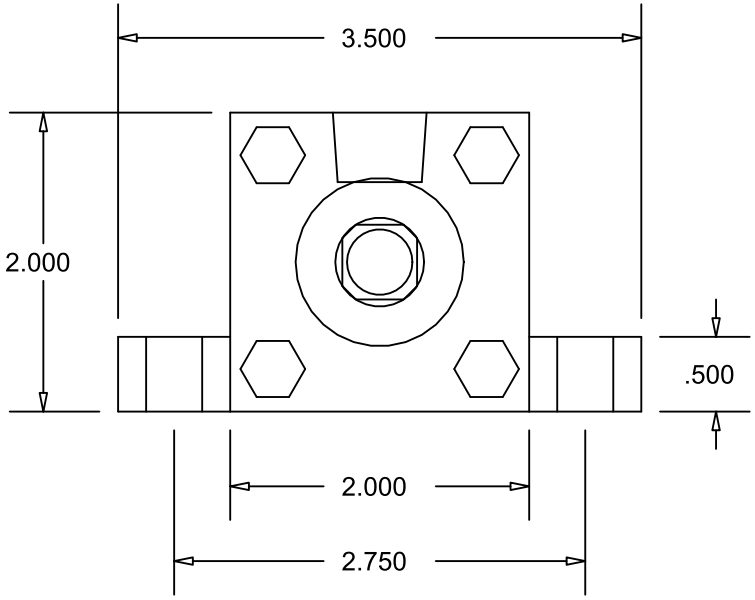

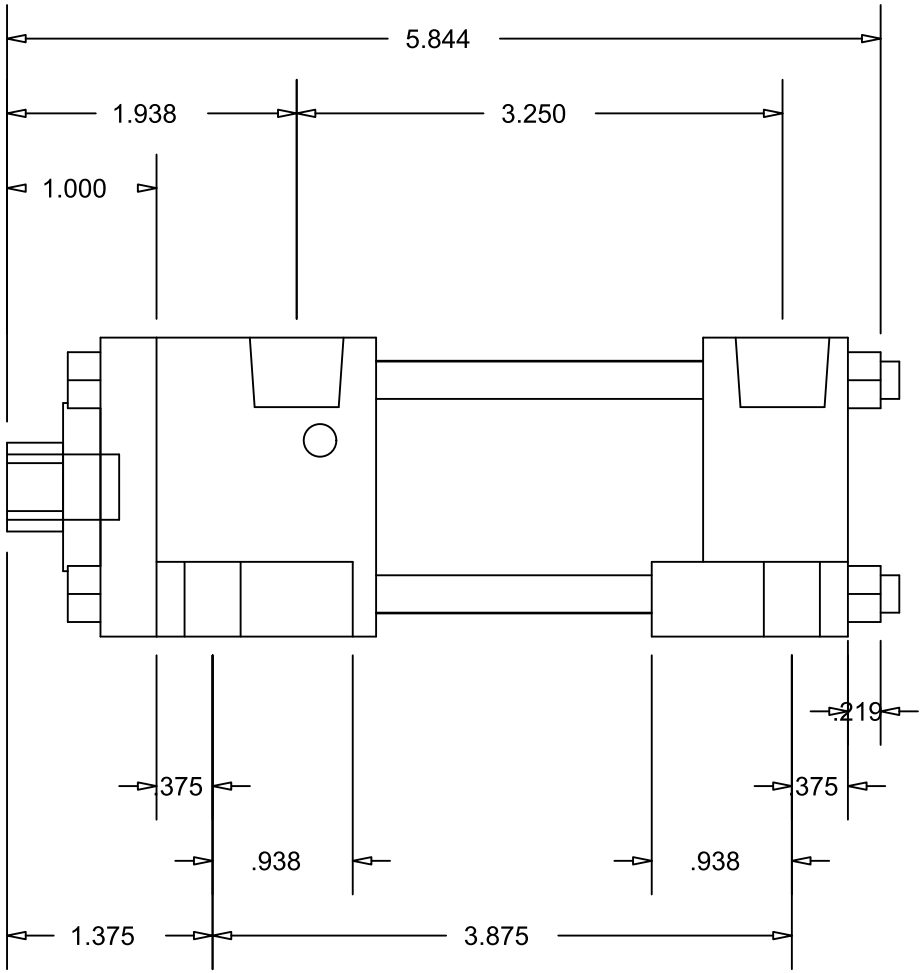

CylindersNow.com
Model No: CN15ASL1CCKS4
Logia No: CN15ASL1CCKS4
Rod End Thread: Female 7/16 - 20 x 3/4
Bore: 1.5"
Shaft Dia: 5/8"
NPT Port Size: 3/8
Mount: SL
Stroke: 1
Series: A
Mount Bolt Size: 1/4