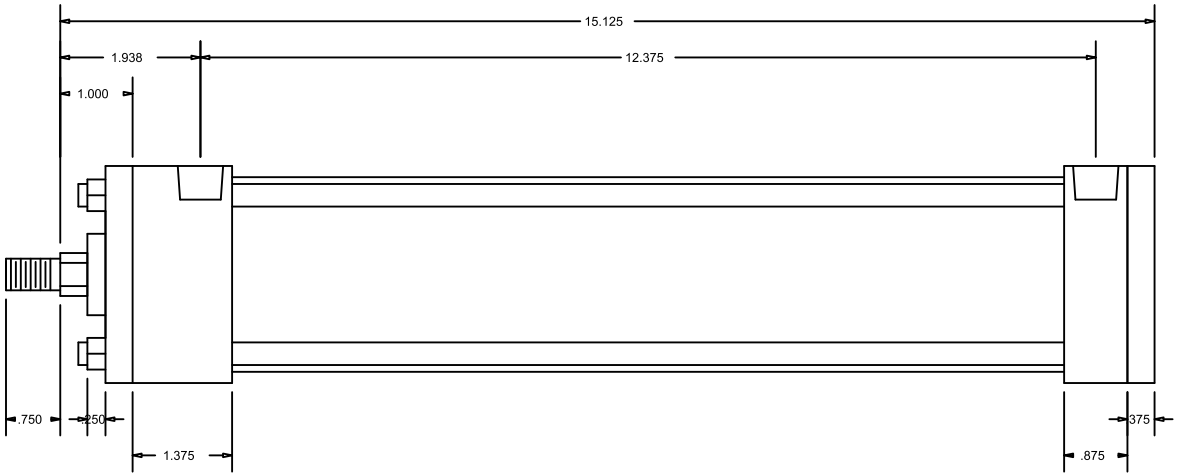

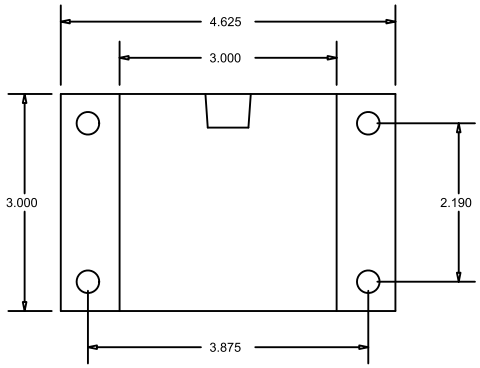

CylindersNow.com
Model No: CN25ARF10NC
Logia No: CN25ARF10NC
Rod End Thread: Male 7/16 - 20 x 3/4
Bore: 2.5"
Shaft Dia: 5/8"
NPT Port Size: 3/8
Mount: RF
Stroke: 10
Series: A
Mount Bolt Size: 5/16