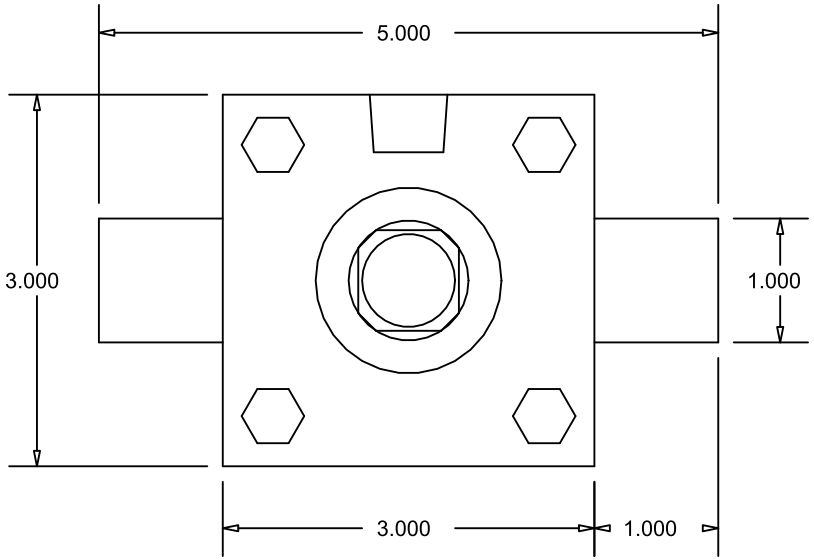

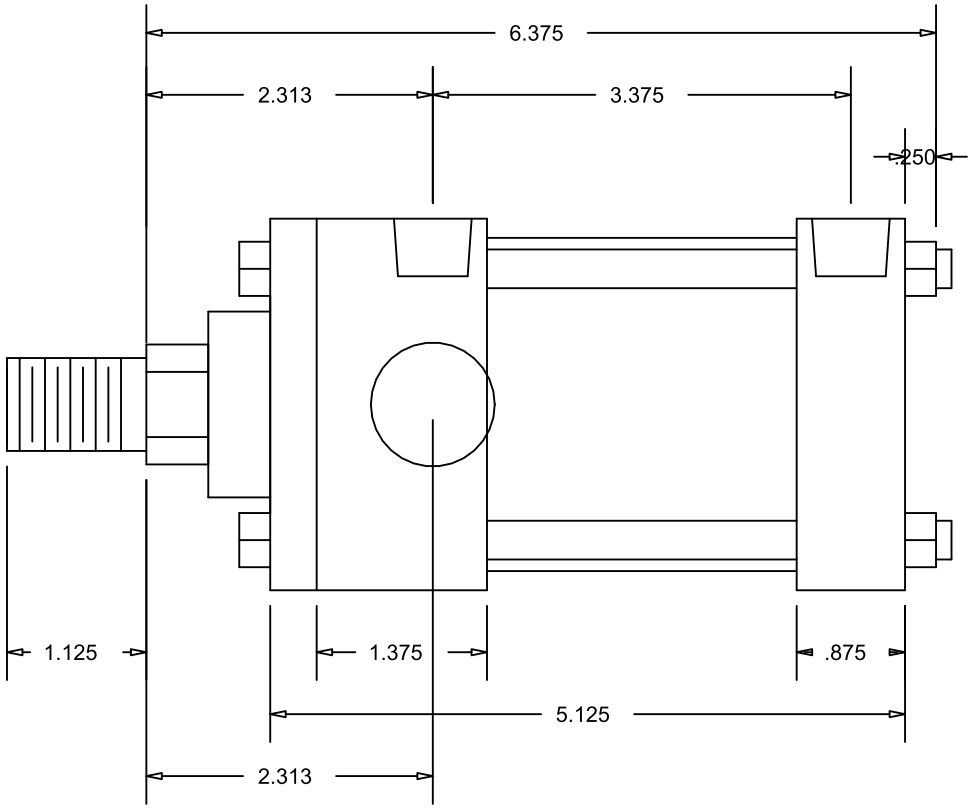

CylindersNow.com
Model No: CN25ATF1NCK1
Logia No: CN25ATF1NCK1
Rod End Thread: Male 3/4 - 16 x 1-1/8
Bore: 2.5"
Shaft Dia: 1"
NPT Port Size: 3/8
Mount: TF
Stroke: 1
Series: A