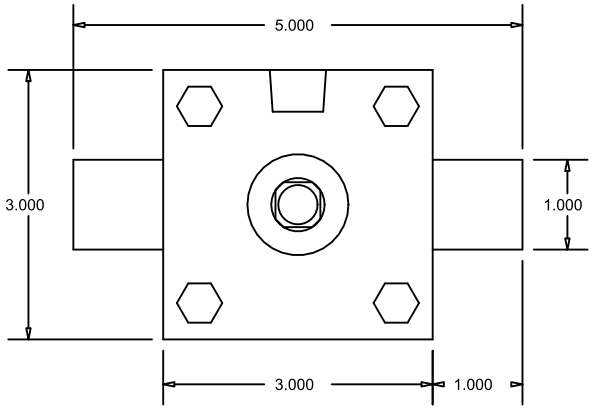

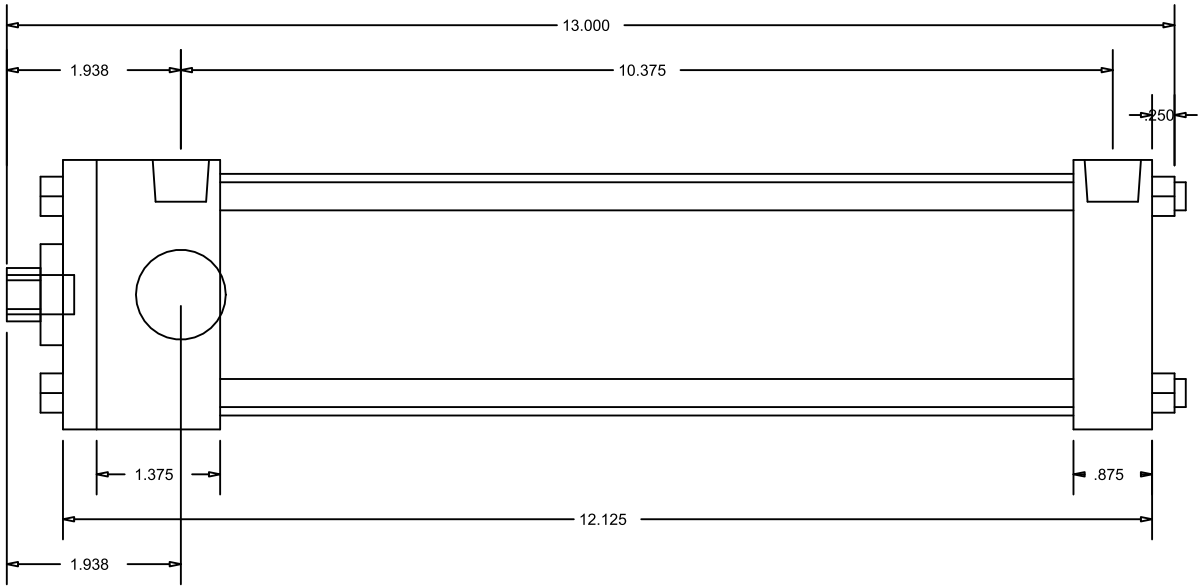

CylindersNow.com
Model No: CN25ATF8NCKS4
Logia No: CN25ATF8NCKS4
Rod End Thread: Female 7/16 - 20 x 3/4
Bore: 2.5"
Shaft Dia: 5/8"
NPT Port Size: 3/8
Mount: TF
Stroke: 8
Series: A