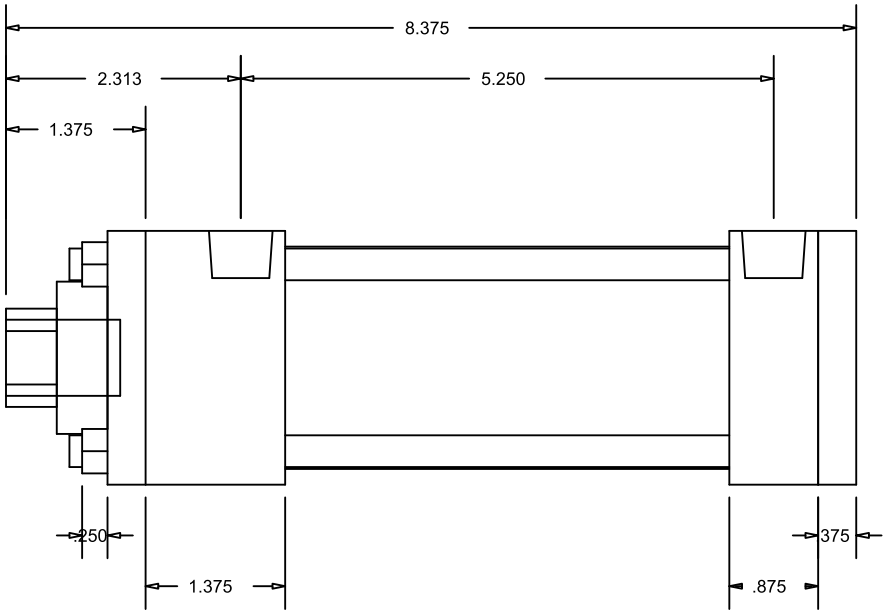

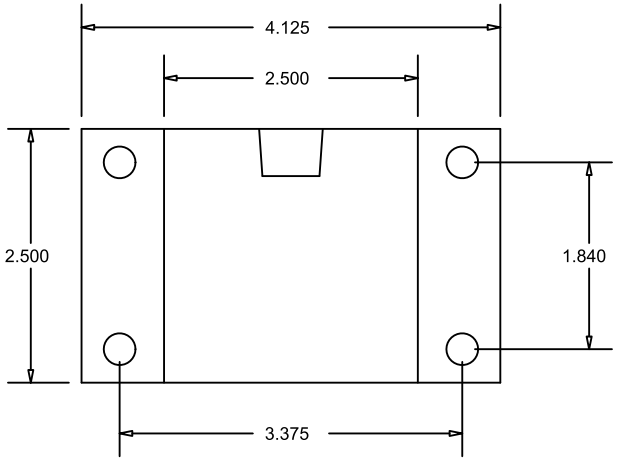

CylindersNow.com
Model No: CN2ARF3NCK1S4
Logia No: CN2ARF3NCK1S4
Rod End Thread: Female 3/4 - 16 x 1-1/8
Bore: 2"
Shaft Dia: 1"
NPT Port Size: 3/8
Mount: RF
Stroke: 3
Series: A
Mount Bolt Size: 5/16