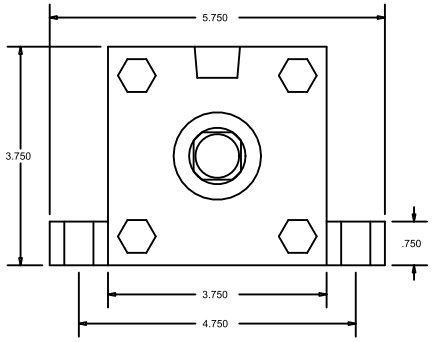

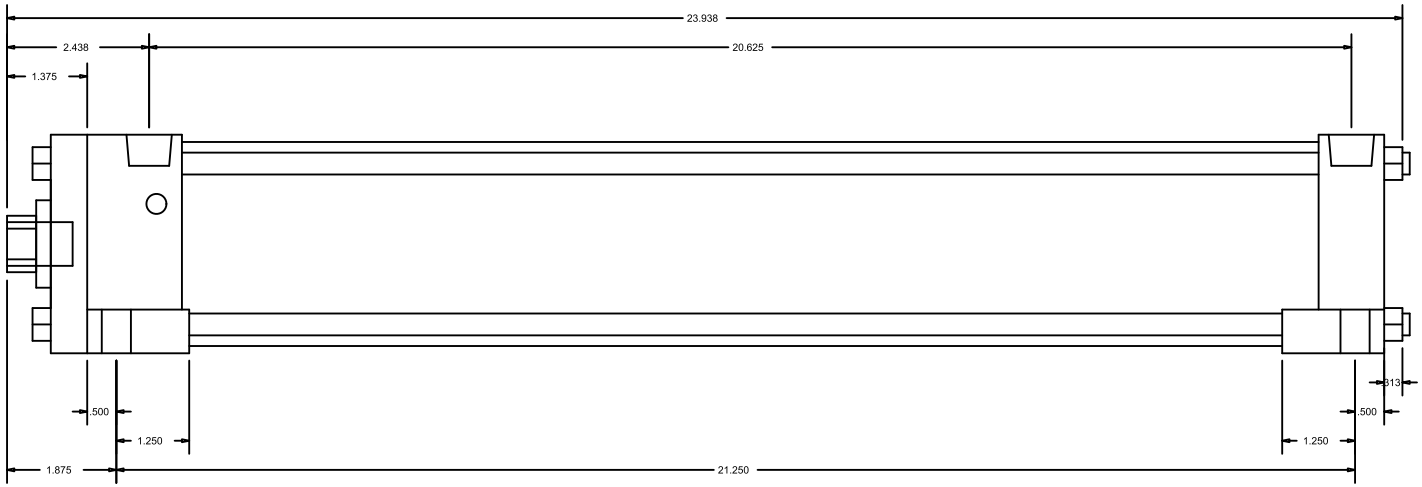

CylindersNow.com
Model No: CN325ASL18CCKS4
Logia No: CN325ASL18CCKS4
Rod End Thread: Female 3/4 - 16 x 1-1/8
Bore: 3.25"
Shaft Dia: 1"
NPT Port Size: 1/2
Mount: SL
Stroke: 18
Series: A
Mount Bolt Size: 3/8