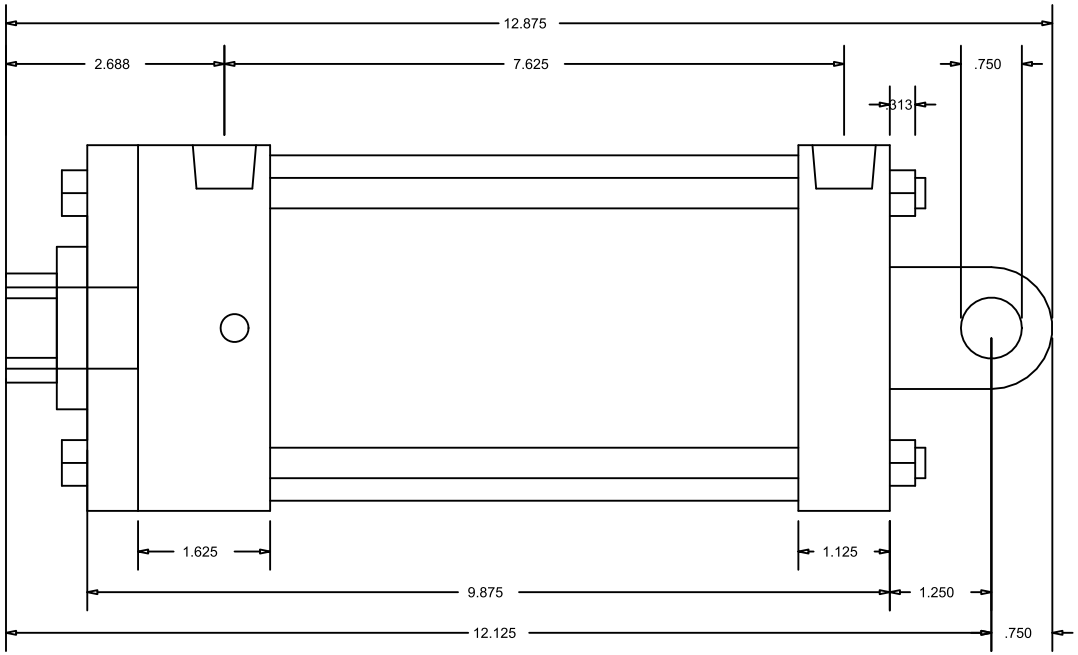

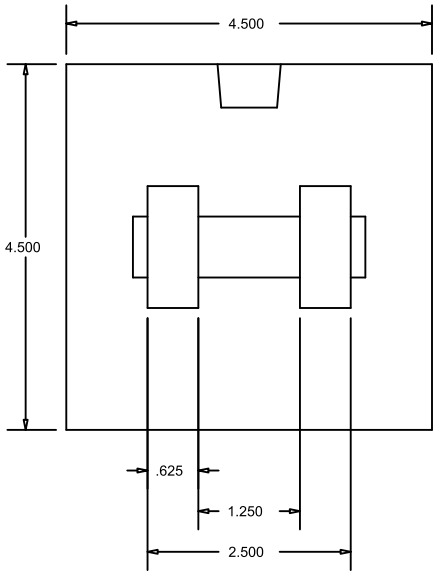

CylindersNow.com
Model No: CN4AC5CCK1375S4
Logia No: CN4AC5CCK1375S4
Rod End Thread: Female 1 - 14 x 1-5/8
Bore: 4"
Shaft Dia: 1 3/8"
NPT Port Size: 1/2
Mount: C
Stroke: 5
Series: A